PORTE-OUTILS TYPE " BMT "

PORTA UTENSILI PER TORNI CNC
TOOLHODERS TYPE "BMT" FOR LATHE

I portautensili per torni tipo "BMT" vengono impiegati sui torni cnc Dmg Mori Seiki, Doosan, Nakamura Tome, Okuma, Mazak, Cmz, Biglia, Haas. La produzione principale riguarda i portautensili statici che garantiscono massima precisione sia per lavorazioni di tornitura che per lavorazioni di foratura e barenatura. In particolare sono stati progettati portautensili multipli per il montaggio di più utensili sovrapposti in un'unica stazione necessari nei torni di nuova generazione con mandrino, contro-mandrino e portautensili motorizzati.

Descrizione e specifiche
I portautensili per torni tipo "BMT" sono costruiti con acciaio certificato altamente legato e sono sottoposti ad un trattamento anti corrosione. Tutto il ciclo produttivo viene svolto nel nostro stabilimento in Italia con macchine utensili di alta precisione ed è rigorosamente controllato. Grazie all'ampia disponibilità di magazzino possiamo generalmente spedire il materiale il giorno stesso della ricezione dell'ordine.

Maggiori informazioni
I portautensili assiali per foratura e barenatura prodotti da Chia-mo sono studiati con la possibilità di selezionare il passaggio di liquido refrigerante esterno o interno. Possiamo inoltre eseguire portautensili speciali su richiesta del cliente.

Prodotti
Porta utensili assiali per torni cnc – Porta utensili radiali per torni cnc – Porta utensili per torni Dmg Mori, Doosan, Biglia, Cmz, Nakamura Tome, Haas, Okuma, Goodway.

Toolholders type "BMT" are used on cnc lathes Dmg Mori Seiki, Doosan, Nakamura Tome, Okuma, Mazak, Cmz, Biglia, Haas. The main production concerns static tool that guarantee maximum precision both for turning and for drilling and boring. In particular, multiple tool holders have been designed for the assembly of many tools in a single station needed in lathes of new generation with the spindle, the counter spindle and rotary tool holders.

Description and Specifications
Toolholders type "BMT" are produced with certified top quality steel and are subjected to an anti-corrosion treatment. All production cycle is carried out in our factory in Italy with high precision machines and is carefully controlled. Thanks to the availability of stock, we can usually ship the material the same day as order is received.

Further Information
The axial boring bar toolholders products from Chia-mo are designed with the possibility to select external or internal cooling circuit. We can also produce special tool holders on request.

Products
Axial cnc tool holders – Radial cnc tool holders – Tool holders for lathe Dmg Mori, Doosan, Biglia, Cmz, Nakamura, Haas, Okuma, Goodway.

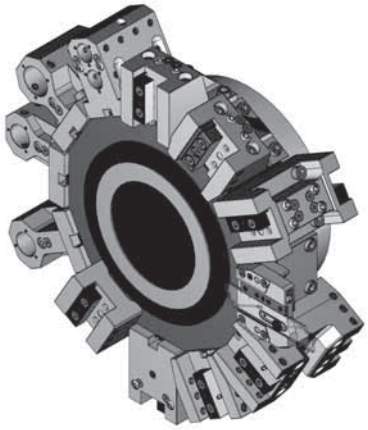
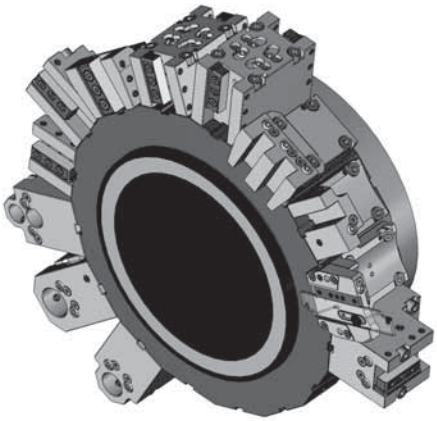
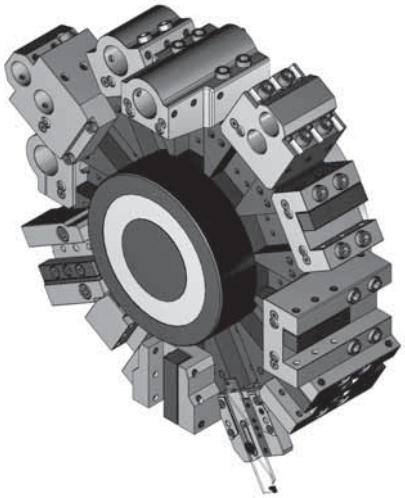

7 = PORTAUTENSILE PER TORNITURA INTERNA / Internal turning toolholder
8 = PORTAUTENSILE PER TORNITURA ESTERNA / External turning toolholder

DIMENSIONE ATTACCO TORRETTA / Turret dimension

TIPOLOGIA PORTAUTENSILE / Toolholder type

DIMENSIONE PRINCIPALE / Principal dimension

DIMENSIONE AGGIUNTIVA / Secondary dimension

CHIA-MO cod. **7M8C40 R H120**

R = PORTAUTENSILE MONTATO CON PREDISPOSIZIONE PER REFRIGERAZIONE INTERNA
R = The toolholder is assembled for internal coolant

senza R = PORTAUTENSILE MONTATO CON PREDISPOSIZIONE PER REFRIGERAZIONE ESTERNA
without R = The toolholder is assembled for external coolant

TORNIO / Lathe

B	= BIGLIA	pag. 64
C	= CMZ	pag. 73
D	= DOOSAN	pag. 56
E	= SAUTER - BARUFFALDI	pag. 87
F	= FUJI	pag. 85
G	= GOODWAY	pag. 86
H	= HAAS	pag. 80
K	= OKUMA	pag. 82
M	= MORI SEIKI / DMG MORI	pag. 44
MU	= MURATEC	pag. 84
N	= NAKAMURA	pag. 69
Z	= MAZAK	pag. 62

MODELLI / Models
NL / NLX 1500/2000/2500/3000 (12 station turret)
NT 4000/4200/4250/4300/5000/5400
NZL 2000/2500
NZX 2500 (12 station turret)

MACCHINE COMPATIBILI / Compatibility machines
Goodway G4 / GS 2000/2600/2800/3000/3300/3600

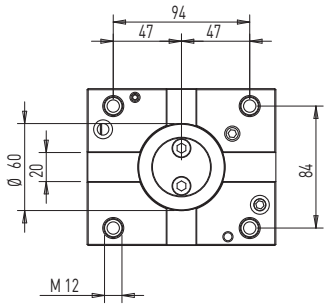

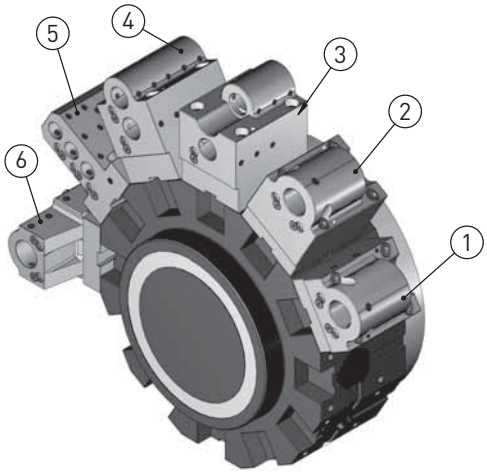

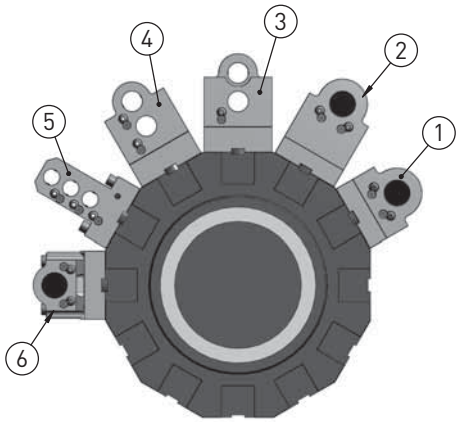

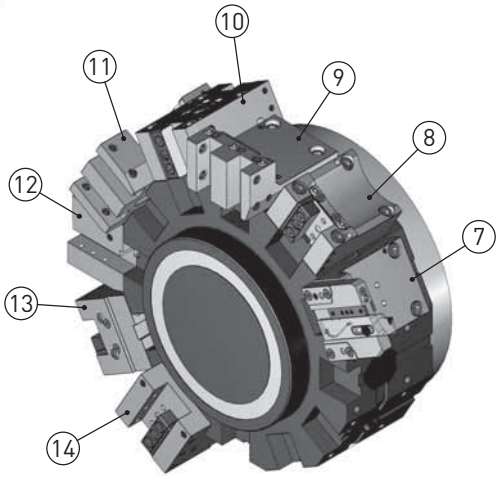

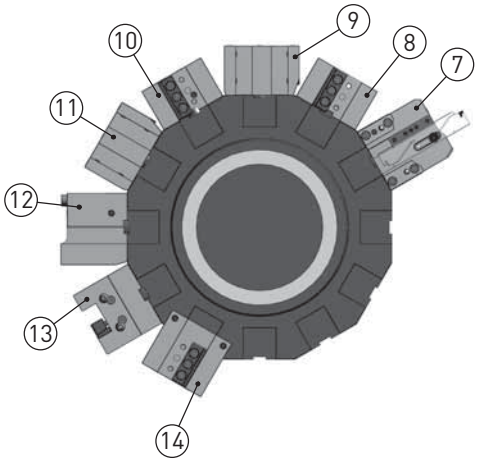

1

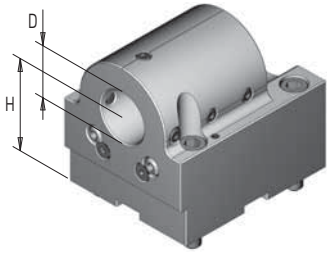

Art. / Code	Art. / Code DMG MORI	D	H	Coolant IN	Coolant OUT
7M8C40	T10097	40	80	✓	✓
7M8C40 R	T13128	40	80	✓	✓
7M8C50	T10098	50	80	✗	✓
7M8C50 R	/	50	80	✓	✓

2

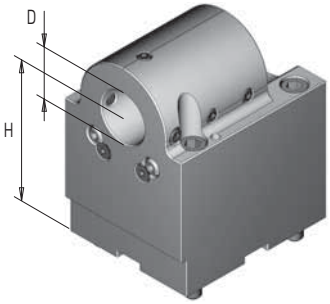

Art. / Code	Art. / Code DMG MORI	D	H	Coolant IN	Coolant OUT
7M8C40 H120	T10113	40	120	✓	✓
7M8C40 R H120	T13131	40	120	✓	✓
7M8C50 H120	T10114	50	120	✗	✓
7M8C50 R H120	/	50	120	✓	✓

MODELLI / Models
NL / NLX 1500/2000/2500/3000 (12 station turret)
NT 4000/4200/4250/4300/5000/5400
NZL 2000/2500
NZX 2500 (12 station turret)

MACCHINE COMPATIBILI / Compatibility machines
Goodway G4 / GS 2000/2600/2800/3000/3300/3600

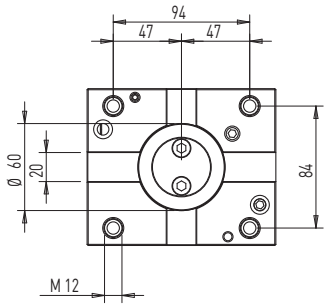

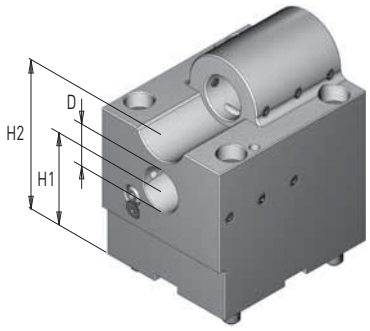

3

Art. / Code	Art. / Code DMG MORI	D	H1	H2	Coolant IN	Coolant OUT
7M8D32	T10096	32	80	125	✓	✓

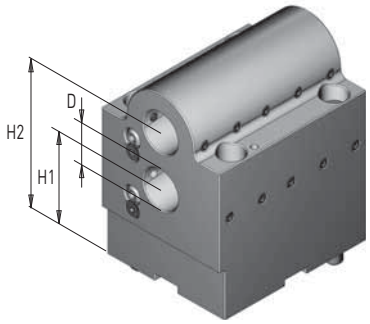

4

Art. / Code	Art. / Code DMG MORI	D	H1	H2	Coolant IN	Coolant OUT
7M8D32 L	/	32	80	125	✓	✓

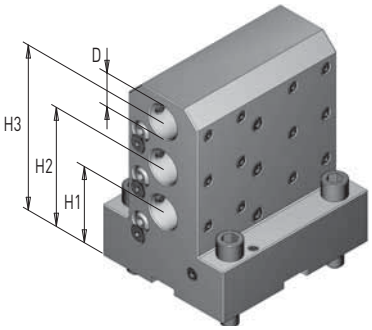

5

Art. / Code	Art. / Code DMG MORI	D	H1	H2	H3	Coolant IN	Coolant OUT
7M8T25 L	T10104	25	60	95	130	✓	✓

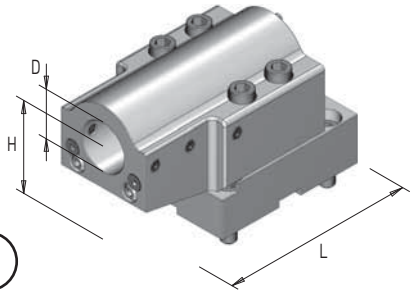

6

Art. / Code	Art. / Code DMG MORI	D	H	L	Coolant IN	Coolant OUT
7M87M6 + 7M6L40	T23018 + T10038	40	80	190	✓	✓
7M87M6 + 7M6L50	T23018 + T10038	50	80	190	✓	✓

MODELLI / Models
NL / NLX 1500/2000/2500/3000 (12 station turret)
NT 4000/4200/4250/4300/5000/5400
NZL 2000/2500
NZX 2500 (12 station turret)

MACCHINE COMPATIBILI / Compatibility machines
Goodway G4 / GS 2000/2600/2800/3000/3300/3600

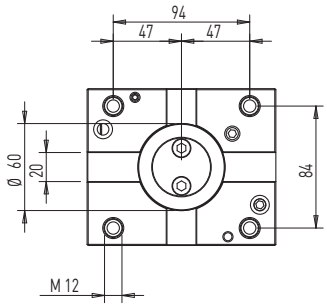

7

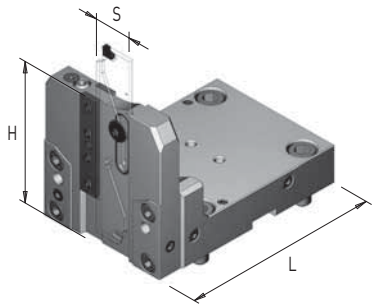

Art. / Code	Art. / Code DMG MORI	S	H	L	Coolant IN	Coolant OUT
8M8B32	/	ISCAR 32	95	160	✓	✓

8

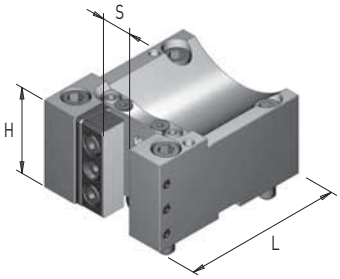

Art. / Code	Art. / Code DMG MORI	S	H	L	Coolant IN	Coolant OUT
8M8V40	T00187	20x20	65	130	✗	✓
8M8V50	T00186	25x25	70	130	✗	✓

9

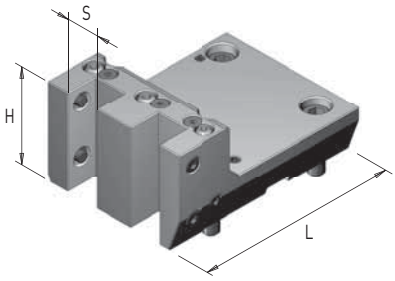

Art. / Code	Art. / Code DMG MORI	S	H	L	Coolant IN	Coolant OUT
8M8V25 D	/	25x25	78	164	✗	✓

10

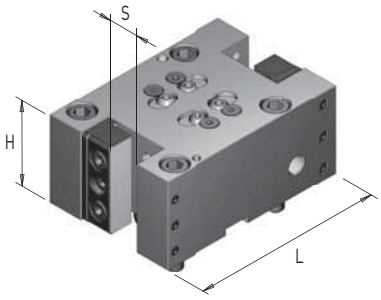

Art. / Code	Art. / Code DMG MORI	S	H	L	Coolant IN	Coolant OUT
8M8D40	T00185	20x20	65	150	✗	✓
8M8D50	T00184	25x25	70	155	✗	✓

MODELLI / Models
NL / NLX 1500/2000/2500/3000 (12 station turret)
NT 4000/4200/4250/4300/5000/5400
NZL 2000/2500
NZX 2500 (12 station turret)

MACCHINE COMPATIBILI / Compatibility machines
Goodway G4 / GS 2000/2600/2800/3000/3300/3600

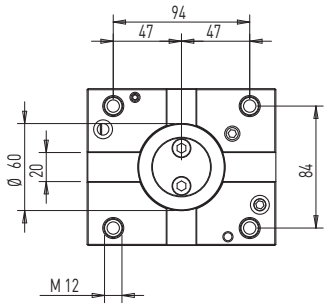

11

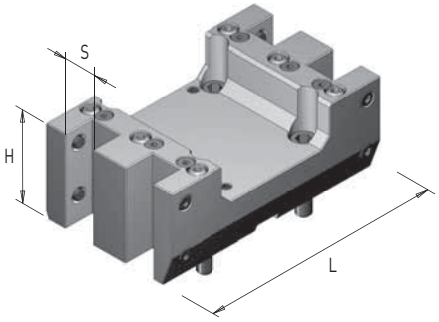

Art. / Code	Art. / Code DMG MORI	S	H	L	Coolant IN	Coolant OUT
8M8D25 Q	/	25x25	78	197	✗	✓

12

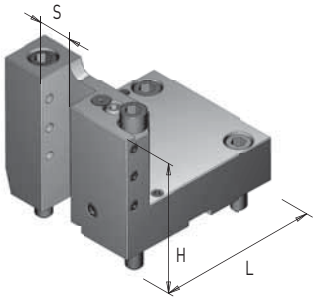

Art. / Code	Art. / Code DMG MORI	S	H	L	Coolant IN	Coolant OUT
8M8B25	T00197	25x25	95	130	✗	✓

13

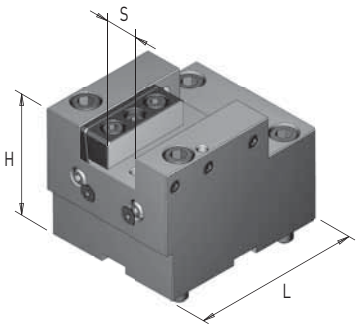

Art. / Code	Art. / Code DMG MORI	S	H	L	Coolant IN	Coolant OUT
8M8C40	T03006	20x20	70	130		
8M8C50	T03005	25x25	100	130		

14

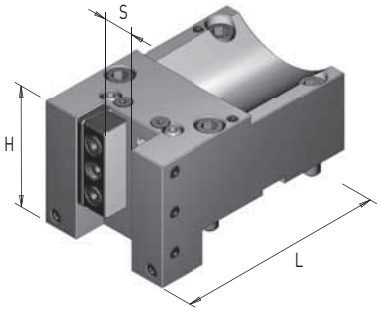

Art. / Code	Art. / Code DMG MORI	S	H	L	Coolant IN	Coolant OUT
8M8V50 L	/	25x25	98	169	✗	✓

MODELLI / Models
NZ 1500/2000/3100
NT / NTZ 1000/2000/3000/3100/3150/3200
NZ / NZX 2000/2500 (16 station turret)
NL / NLX 1500/2000/2500 (20 station turret)
DURATURN 2050/2550 MC

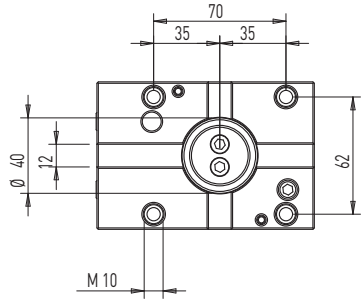

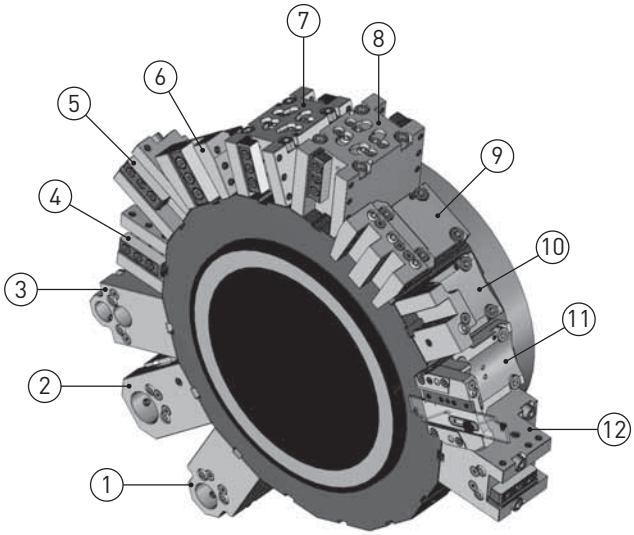

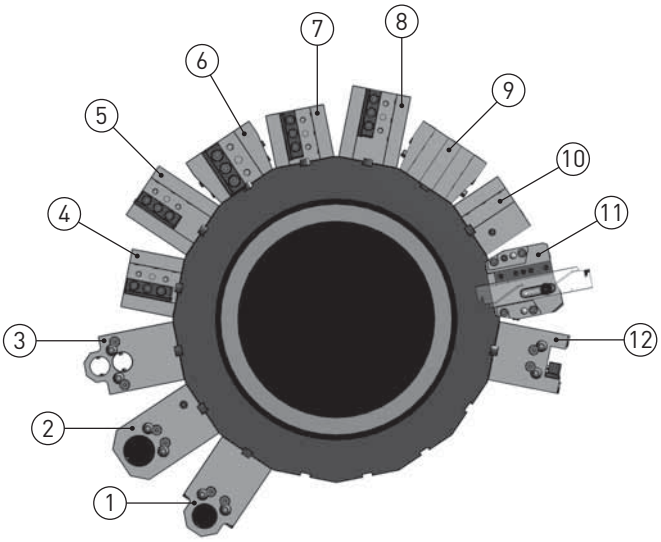

1

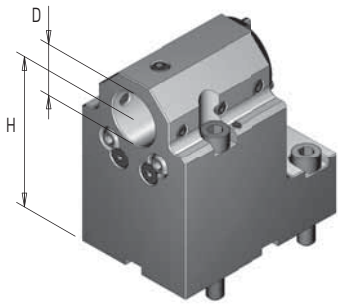

Art. / Code	Art. / Code DMG MORI	D	H	Coolant IN	Coolant OUT
7M5C32	T10115	32	100	✓	✓
7M5C32 R	T13132	32	100	✓	✓

2

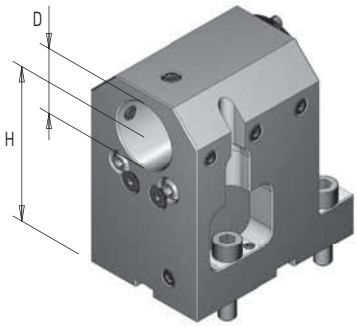

Art. / Code	Art. / Code DMG MORI	D	H	Coolant IN	Coolant OUT
7M5C40	/	40	100	✓	✓
7M5C40 R	/	40	100	✓	✓

MODELLI / Models
NZ 1500/2000/3100
NT / NTZ 1000/2000/3000/3100/3150/3200
NZ / NZX 2000/2500 (16 station turret)
NL / NLX 1500/2000/2500 (20 station turret)
DURATURN 2050/2550 MC

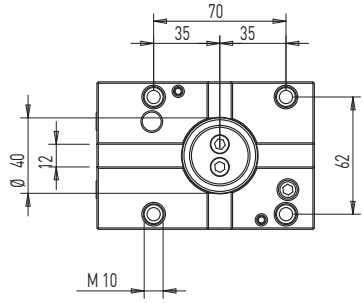

3

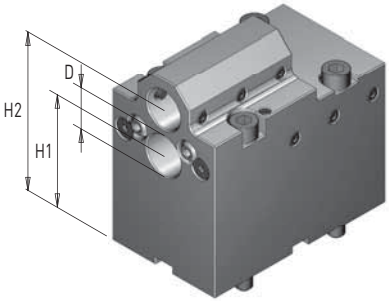

Art. / Code	Art. / Code DMG MORI	D	H1	H2	Coolant IN	Coolant OUT
7M5D25	T10117	25	75	105	✓	✓

4

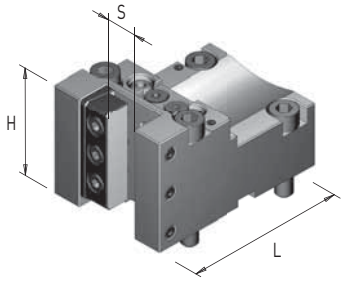

Art. / Code	Art. / Code DMG MORI	S	H	L	Coolant IN	Coolant OUT
8M5V40	T00224	20x20	70	115	✗	✓

5

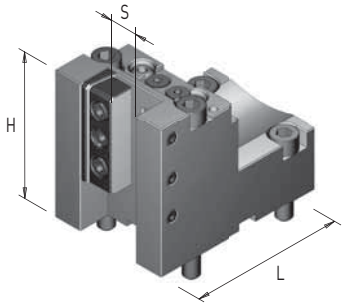

Art. / Code	Art. / Code DMG MORI	S	H	L	Coolant IN	Coolant OUT
8M5V40 H95	T00225	20x20	95	115	✗	✓

6

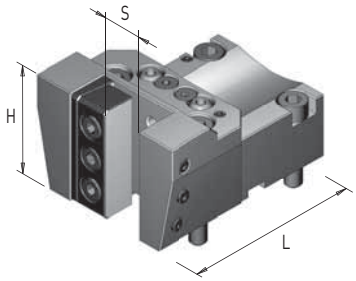

Art. / Code	Art. / Code DMG MORI	S	H	L	Coolant IN	Coolant OUT
8M5V50	/	25x25	70	124	✗	✓

7

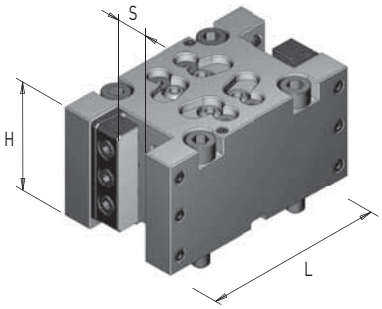

Art. / Code	Art. / Code DMG MORI	S	H	L	Coolant IN	Coolant OUT
8M5D40	T00228	20x20	70	130	✗	✓

MODELLI / Models
NZ 1500/2000/3100
NT / NTZ 1000/2000/3000/3100/3150/3200
NZ / NZX 2000/2500 (16 station turret)
NL / NLX 1500/2000/2500 (20 station turret)
DURATURN 2050/2550 MC

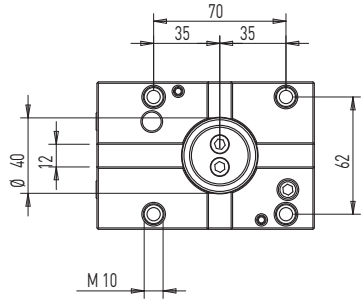

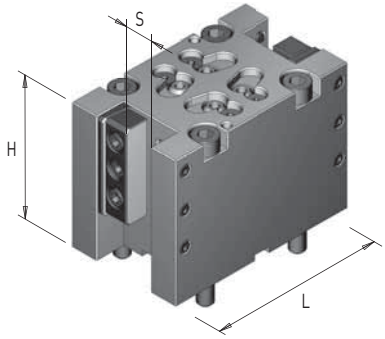

8

Art. / Code	Art. / Code DMG MORI	S	H	L	Coolant IN	Coolant OUT
8M5D40 H95	T00226	20x20	95	130	✗	✓

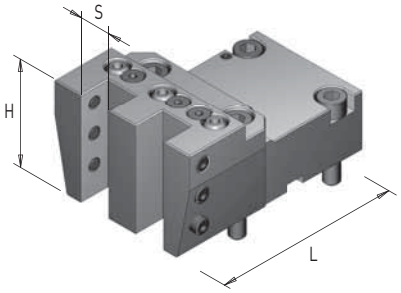

9

Art. / Code	Art. / Code DMG MORI	S	H	L	Coolant IN	Coolant OUT
8M5V20 D	/	20x20	70	139	✗	✓

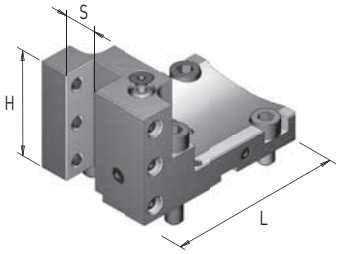

10

Art. / Code	Art. / Code DMG MORI	S	H	L	Coolant IN	Coolant OUT
8M5B20	T00251	20x20	70	115	✗	✓

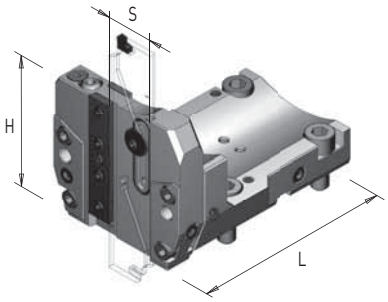

11

Art. / Code	Art. / Code DMG MORI	S	H	L	Coolant IN	Coolant OUT
8M5B32	/	ISCAR 32	80	135	✓	✓

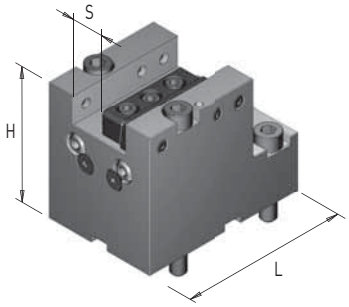

12

Art. / Code	Art. / Code DMG MORI	S	H	L	Coolant IN	Coolant OUT
8M5C40	T03017	20x20	92	115	✗	✓

MODELLI / Models
CL 200/203
SL 20/25
SL 200/203/204/250/253/254 (MC, SMC) - 2500Y
ZL/DL 200/250 (MC)

MACCHINE COMPATIBILI / Compatibility machines
Goodway GS 200/260/280
Goodway GA 2000/2600/2800/3000/3300/3600

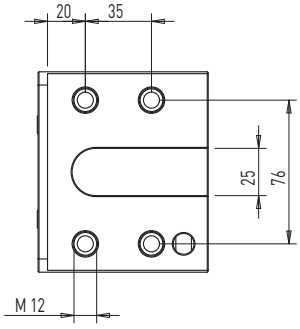

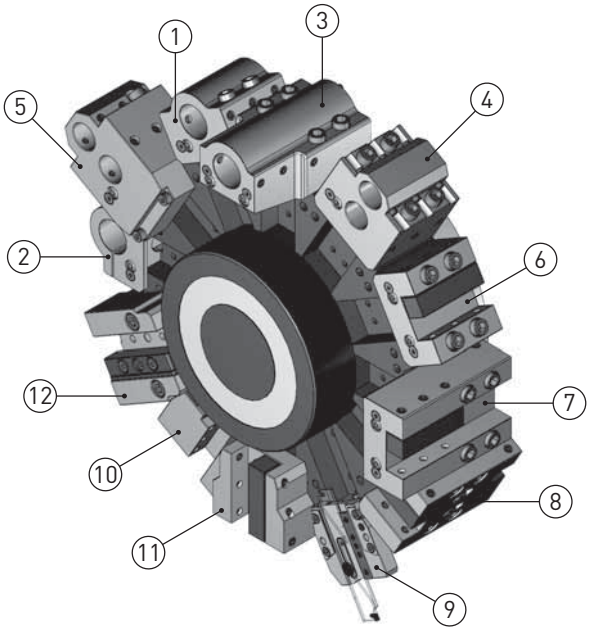

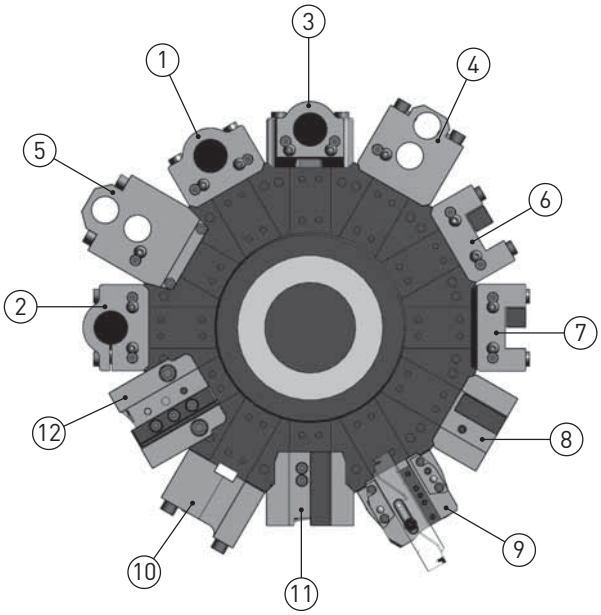

1

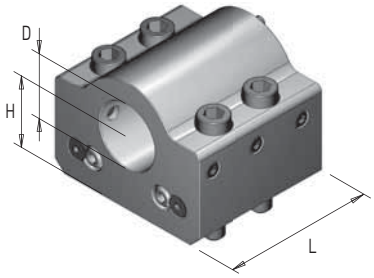

Art. / Code	Art. / Code DMG MORI	D	H	L	Coolant IN	Coolant OUT
7M6C40	T10036	40	40	90	✓	✓
7M6C40 R	T13064	40	40	90	✓	✓
7M6C50	T10044	50	40	90	✓	✓
7M6C50 R	T10044	50	40	90	✓	✓

2

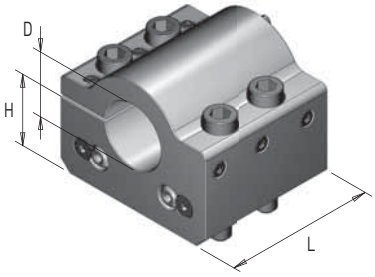

Art. / Code	Art. / Code DMG MORI	D	H	L	Coolant IN	Coolant OUT
7M6C40 B	/	40	40	90	✗	✓

3

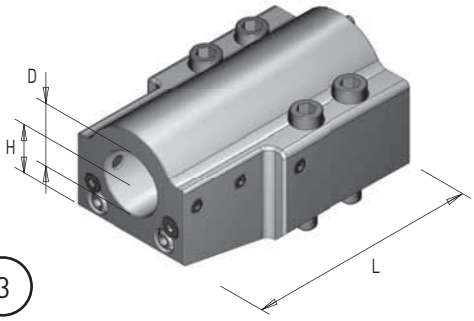

Art. / Code	Art. / Code DMG MORI	D	H	L	Coolant IN	Coolant OUT
7M6L40	T10038	40	40	160	✓	✓
7M6L40 R	T10038	40	40	160	✓	✓
7M6L50	T10094	50	40	160	✓	✓
7M6L50 R	T10094	50	40	160	✓	✓

MODELLI / Models
CL 200/203
SL 20/25
SL 200/203/204/250/253/254 (MC, SMC) - 2500Y
ZL/DL 200/250 (MC)

MACCHINE COMPATIBILI / Compatibility machines
Goodway GS 200/260/280
Goodway GA 2000/2600/2800/3000/3300/3600

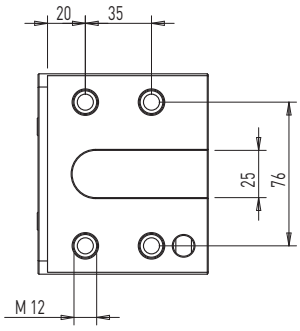

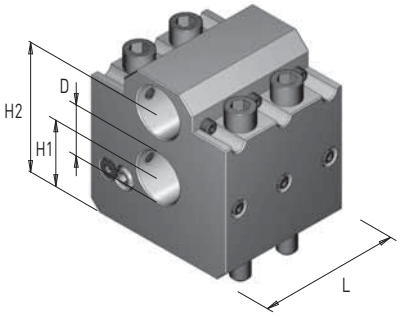

4

Art. / Code	Art. / Code DMG MORI	D	H1	H2	L	Coolant IN	Coolant OUT
7M6D32	T10086	32	40	82	90	✓	✓

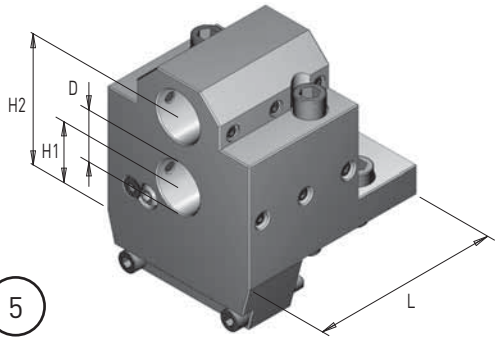

5

Art. / Code	Art. / Code DMG MORI	D	H1	H2	L	Coolant IN	Coolant OUT
7M6D32 L	T10208	32	40	85	125	✓	✓

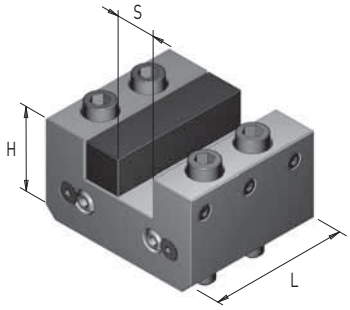

6

Art. / Code	Art. / Code DMG MORI	S	H	L	Coolant IN	Coolant OUT
8M6C50	T00068	25x25	55	90	✗	✓

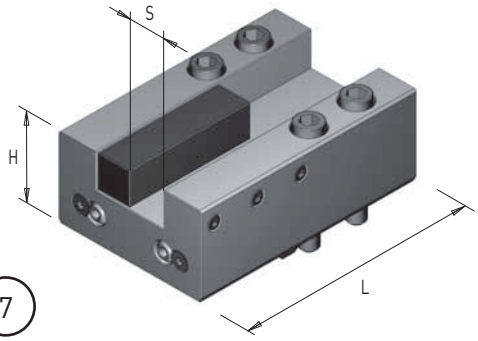

7

Art. / Code	Art. / Code DMG MORI	S	H	L	Coolant IN	Coolant OUT
8M6L50	T00082	25x25	60	160	✗	✓

MODELLI / Models
CL 200/203
SL 20/25
SL 200/203/204/250/253/254 (MC, SMC) - 2500Y
ZL/DL 200/250 (MC)

MACCHINE COMPATIBILI / Compatibility machines
Goodway GS 200/260/280
Goodway GA 2000/2600/2800/3000/3300/3600

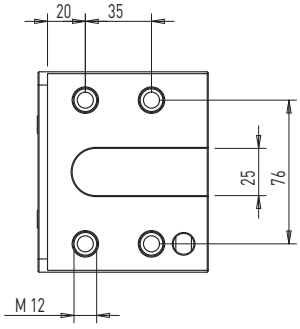

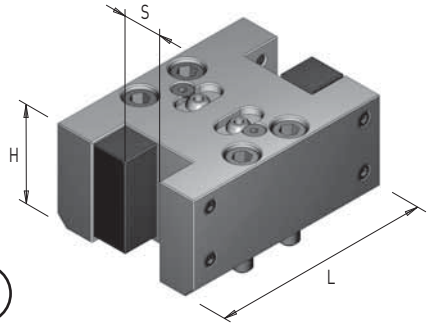

8

Art. / Code	Art. / Code DMG MORI	S	H	L	Coolant IN	Coolant OUT
8M6D50	T00158	25x25	60	139	✗	✓

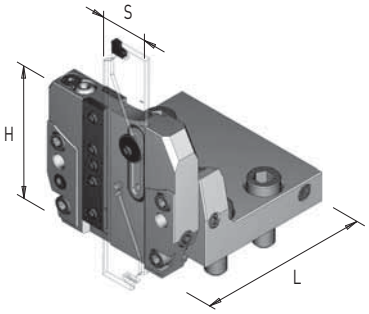

9

Art. / Code	Art. / Code DMG MORI	S	H	L	Coolant IN	Coolant OUT
8M6B32	/	ISCAR 32	80	103	✓	✓

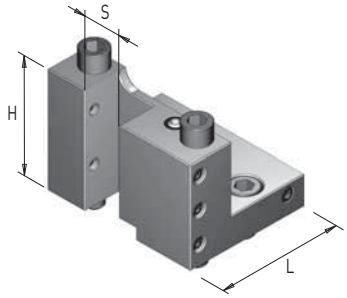

10

Art. / Code	Art. / Code DMG MORI	S	H	L	Coolant IN	Coolant OUT
8M6B25	T00156	25x25	78	85	✗	✓

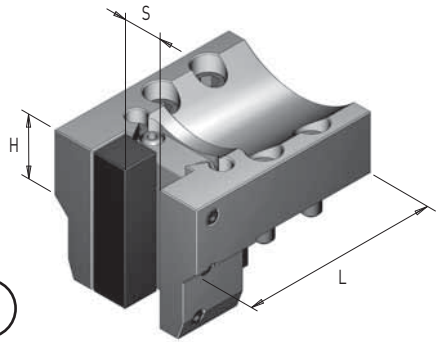

11

Art. / Code	Art. / Code DMG MORI	S	H	L	Coolant IN	Coolant OUT
8M6V50	T00074	25x25	40	130	✗	✓
8M6V50 L	T00076	25x25	40	155	✗	✓

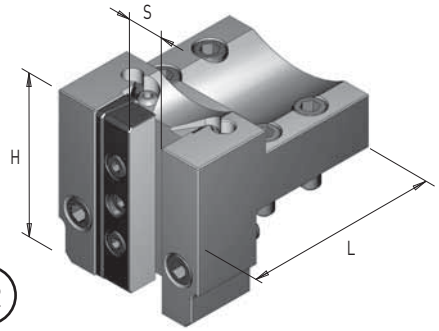

12

Art. / Code	Art. / Code DMG MORI	S	H	L	Coolant IN	Coolant OUT
8M6T50	T00162	25x25	109	130	✗	✓
8M6T50 L	T00164	25x25	109	160	✗	✓

MODELLI / Models
SL/ZL 150/153/154
DL 150

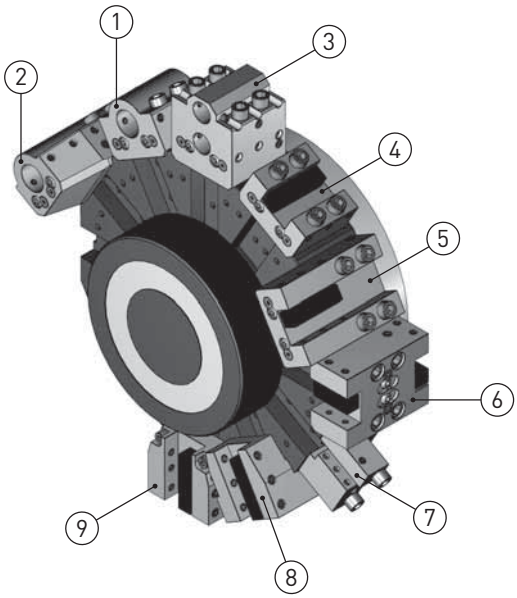

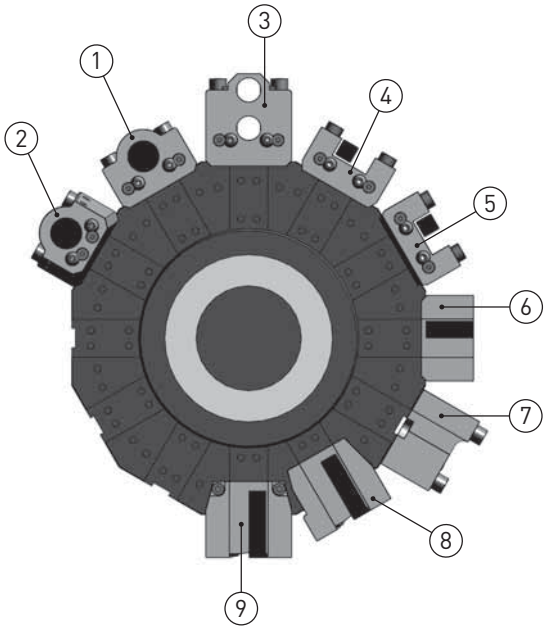

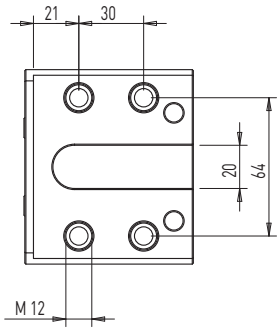

1

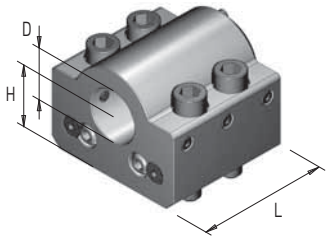

Art. / Code	Art. / Code DMG MORI	D	H	L	Coolant IN	Coolant OUT
7M3C32	T10046	32	35	79	✓	✓
7M3C32 R	T13066	32	35	79	✓	✓

2

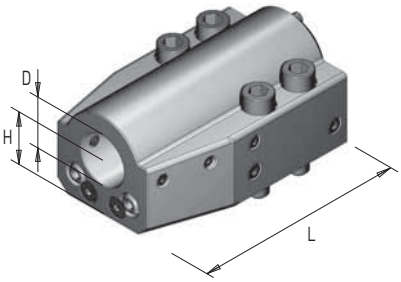

Art. / Code	Art. / Code DMG MORI	D	H	L	Coolant IN	Coolant OUT
7M3L32	T10052	32	35	139	✓	✓

3

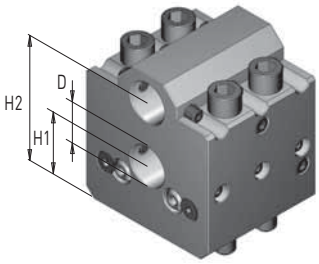

Art. / Code	Art. / Code DMG MORI	D	H1	H2	Coolant IN	Coolant OUT
7M3D25	T10082	25	35	75	✓	✓
7M3D25 R	T10082	25	35	75	✓	✓

4

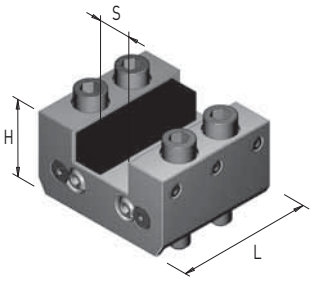

Art. / Code	Art. / Code DMG MORI	S	H	L	Coolant IN	Coolant OUT
8M3C40	T00080	20x20	45	78	✗	✓

MODELLI / Models
SL/ZL 150/153/154
DL 150

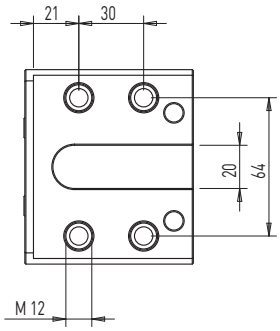

5

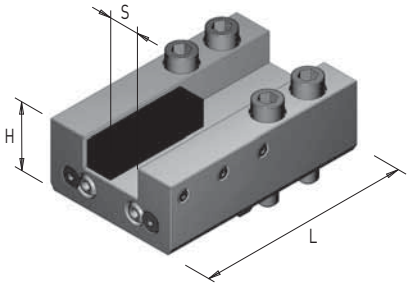

Art. / Code	Art. / Code DMG MORI	S	H	L	Coolant IN	Coolant OUT
8M3L40	T00148	20x20	50	139	✗	✓

6

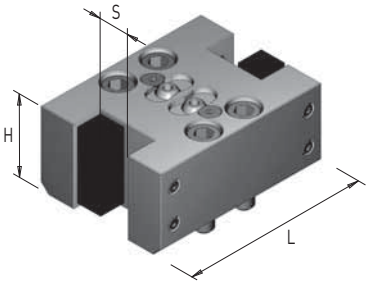

Art. / Code	Art. / Code DMG MORI	S	H	L	Coolant IN	Coolant OUT
8M3D40	T00108	20x20	50	120	✗	✓

7

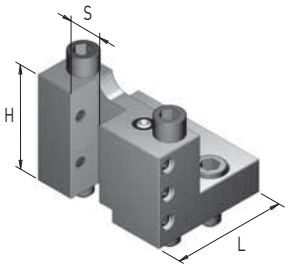

Art. / Code	Art. / Code DMG MORI	S	H	L	Coolant IN	Coolant OUT
8M3B20	T00134	20x20	68	75	✗	✓

8

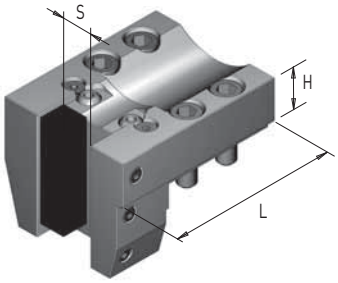

Art. / Code	Art. / Code DMG MORI	S	H	L	Coolant IN	Coolant OUT
8M3V40	T00146	20x20	35	115	✗	✓

9

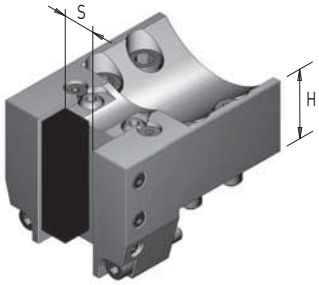

Art. / Code	Art. / Code DMG MORI	S	H	L	Coolant IN	Coolant OUT
8M3T40	T00078	20x20	40	115	✗	✓

MODELLI / Models
PUMA 400/480 (M, LM, XLM)
PUMA 500 (M)
PUMA V550 (M)
PUMA VT750 (TM, 2SP)

MACCHINE COMPATIBILI / Compatibility machines
Samsung PL 45LM
Hyundai Wia LV800RM / SKT - V80R / RM
SKT 400 M / MA / MC / LMC
Hwacheon HI-TECH 550 / 700 / 7026
VT-550

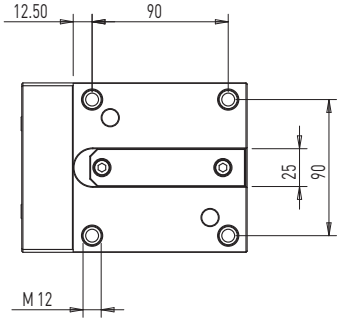

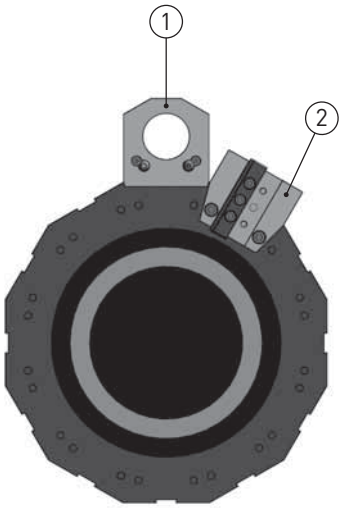

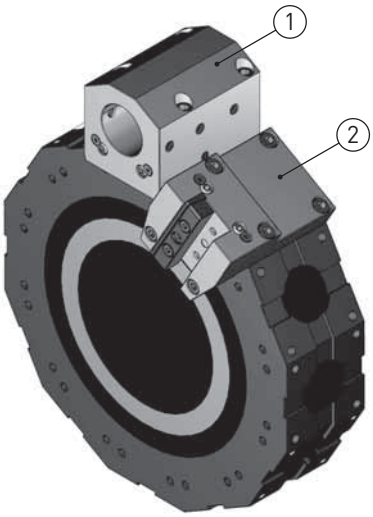

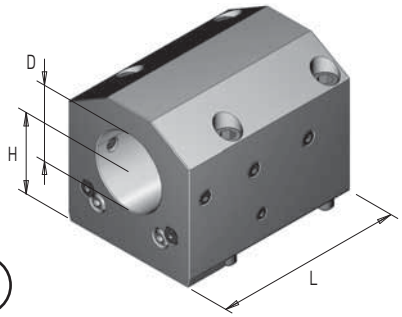

1

Art. / Code	Art. / Code DOOSAN	D	H	L	Coolant IN	Coolant OUT
7D8C60	/	60	60	149	✓	✓
7D8C60 R	/	60	60	149	✓	✓

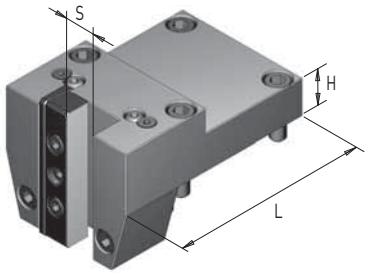

2

Art. / Code	Art. / Code DOOSAN	S	H	L	Coolant IN	Coolant OUT
8D8V50	/	25x25	50	165	✗	✓

MODELLI / Models
PUMA 2100 / 2600 (M, LM, MS, LMS) (Y, LY, SY, LSY)
PUMA 300 (M, MS, MB, MC)
PUMA 3100 (M, LM, LY, XLM, XLY, ULM, ULY)
PUMA MX2000 / 2500 / 2600 (T, ST)
PUMA TT2000 / 2500 (MS, MY, SY)
PUMA TX200 (M, Y, YY)
PUMA V400 (M) - VT450 (M, 2SP)

MACCHINE COMPATIBILI / Compatibility machines
Samsung PL 20/25M - PL 35LM - PL2000/2500Y
Hyundai Wia L300M / MS - L2100 SY
LM 2000 / 2500 TTM / 2500 TTMS / 2500 TTSY
SKT200 / 250 / 250 (TTM, MS, SY) / 300 (M, MS)
Hwacheon CUTEX-240 / HI-TECH 200 / T2-SERIES
HI-TECH 300/400
VT-450
Victor VTURN-A26

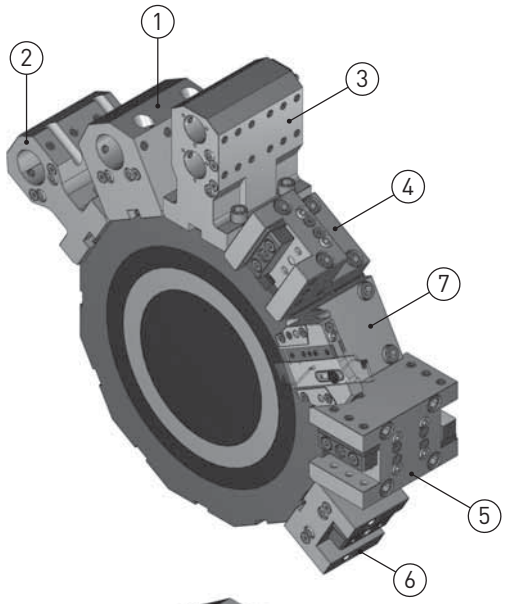

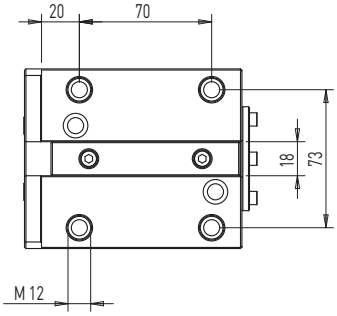

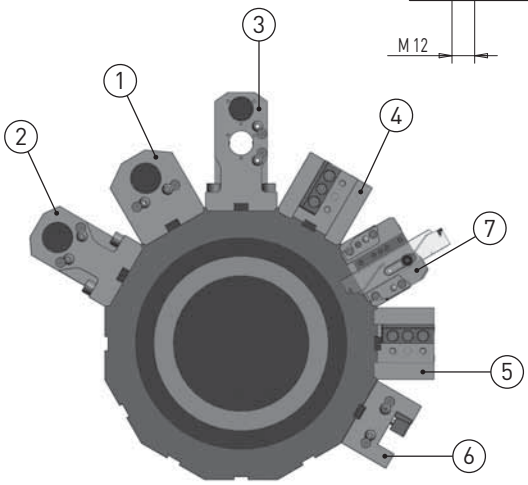

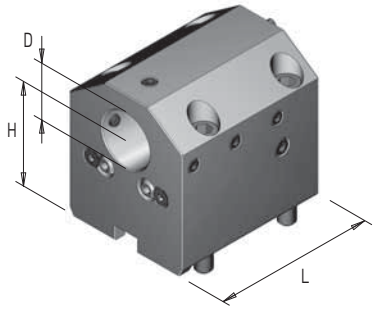

1

Art. / Code	Art. / Code DOOSAN	D	H	L	Coolant IN	Coolant OUT
7D7C40	/	40	72	115	✓	✓
7D7C40 R	/	40	72	115	✓	✓

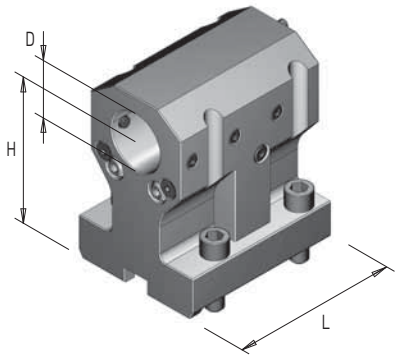

2

Art. / Code	Art. / Code DOOSAN	D	H	L	Coolant IN	Coolant OUT
7D7C40 H100	/	40	100	115	✓	✓
7D7C40 R H100	/	40	100	115	✓	✓
7D7C50 H100	/	50	100	115	✓	✓
7D7C50 R H100	/	50	100	115	✓	✓

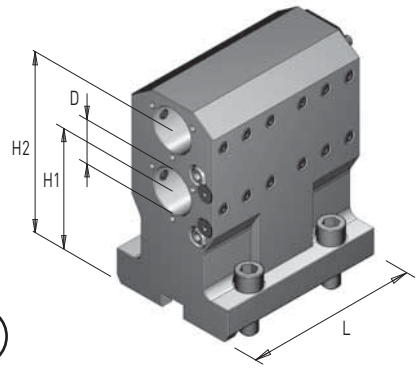

3

Art. / Code	Art. / Code DOOSAN	D	H1	H2	L	Coolant IN	Coolant OUT
7D7D32	/	32	85	130	125	✓	✓
7D7D32 R	/	32	85	130	125	✓	✓

MODELLI / Models
PUMA 2100 / 2600 (M, LM, MS, LMS) (Y, LY, SY, LSY)
PUMA 300 (M, MS, MB, MC)
PUMA 3100 (M, LM, LY, XLM, XLY, ULM, ULY)
PUMA MX2000 / 2500 / 2600 (T, ST)
PUMA TT2000 / 2500 (MS, MY, SY)
PUMA TX200 (M, Y, YY)
PUMA V400 (M) - VT450 (M, 2SP)

MACCHINE COMPATIBILI / Compatibility machines
Samsung PL 20/25M - PL 35LM - PL2000/2500Y
Hyundai Wia L300M / MS - L2100 SY
LM 2000 / 2500 TTM / 2500 TTMS / 2500 TTSY
SKT200 / 250 / 250 (TTM, MS, SY) / 300 (M, MS)
Hwacheon CUTEX-240 / HI-TECH 200 / T2-SERIES
HI-TECH 300/400
VT-450
Victor VTURN-A26

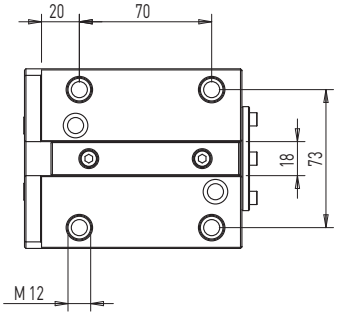

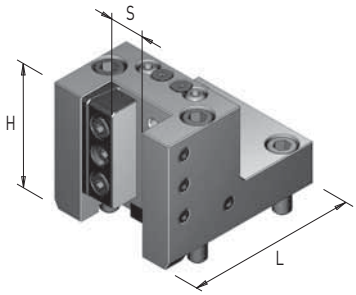

4

Art. / Code	Art. / Code DOOSAN	S	H	L	Coolant IN	Coolant OUT
8D7V50	/	25x25	85	120	✗	✓
8D7V50 L130	/	25x25	85	130	✗	✓

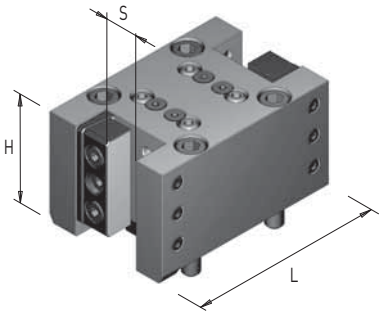

5

Art. / Code	Art. / Code DOOSAN	S	H	L	Coolant IN	Coolant OUT
8D7D50	/	25x25	75	140	✗	✓

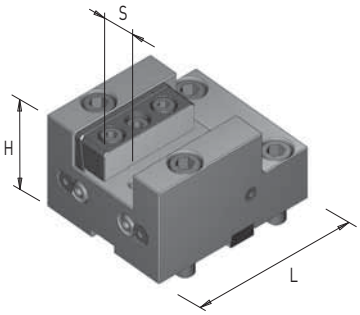

6

Art. / Code	Art. / Code DOOSAN	S	H	L	Coolant IN	Coolant OUT
8D7C50	/	25x25	68	115	✗	✓

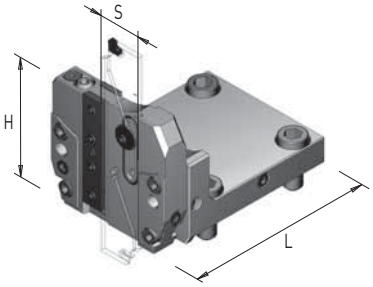

7

Art. / Code	Art. / Code DOOSAN	S	H	L	Coolant IN	Coolant OUT
8D7B32	/	ISCAR32	78	129	✓	✓

MODELLI / Models
LYNX 300 (M)
PUMA 230 / 240 / 280 (M, LM, S)
PUMA 1500 / 2000 / 2500 (M, S, Y)
PUMA 2100 (Y, LY, SY, LSY)
PUMA GT 2100M
PUMA H 250TM
PUMA MX 2100 (ST, LST)
PUMA TL 2000 / 2500 (M, LM)
PUMA TT 1500 / 1800 (MS, SY)

MACCHINE COMPATIBILI / Compatibility machines
Samsung PL 240LM
Hardinge T-51 / 65 super precision - H51
Hyundai Wia L230 LMSA
SKT-160 / 180 TTMS / TTSY
LM 1600 / 1800 TTSY
Hwacheon CUTEX-160 / 240 / T2

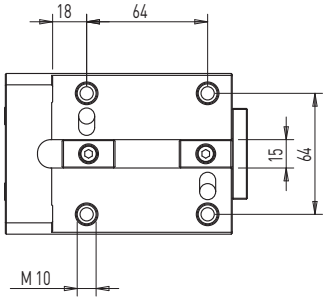

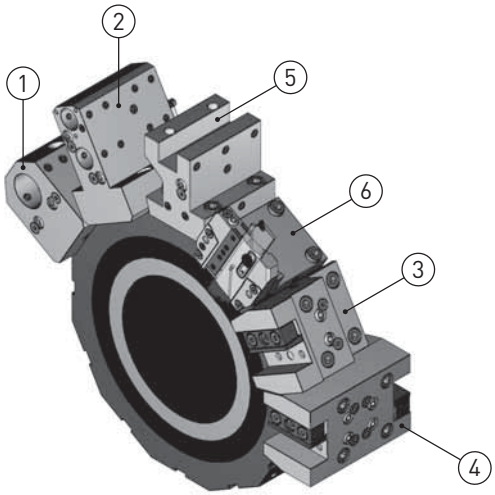

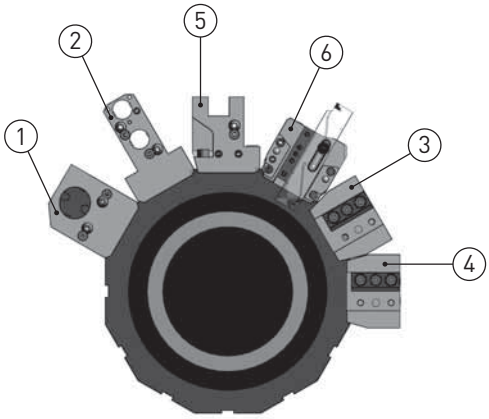

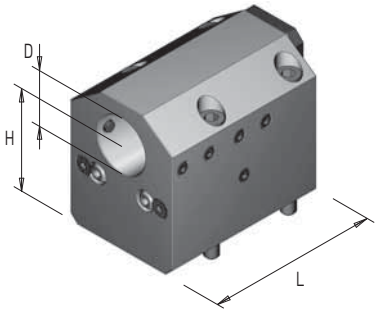

1

Art. / Code	Art. / Code DOOSAN	D	H	L	Coolant IN	Coolant OUT
7D6C32	/	32	70	120	✓	✓
7D6C32 R	/	32	70	120	✓	✓
7D6C40	L61590327D	40	70	120	✓	✓
7D6C40 R	L61590327D	40	70	120	✓	✓

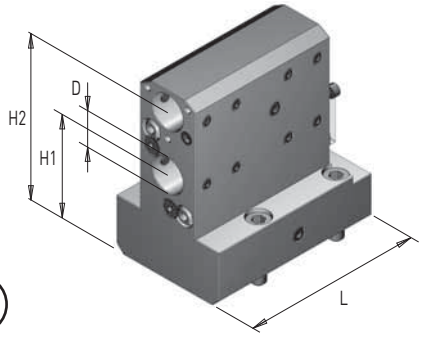

2

Art. / Code	Art. / Code DOOSAN	D	H1	H2	L	Coolant IN	Coolant OUT
7D6D25	L61590357D	25	70	115	126	✓	✓
7D6D25 R	L61590357D	25	70	115	126	✓	✓

MODELLI / Models
LYNX 300 (M)
PUMA 230 / 240 / 280 (M, LM, S)
PUMA 1500 / 2000 / 2500 (M, S, Y)
PUMA 2100 (Y, LY, SY, LSY)
PUMA GT 2100M
PUMA H 250TM
PUMA MX 2100 (ST, LST)
PUMA TL 2000 / 2500 (M, LM)
PUMA TT 1500 / 1800 (MS, SY)

MACCHINE COMPATIBILI / Compatibility machines
Samsung PL 240LM
Hardinge T-51 / 65 super precision - H51
Hyundai Wia L230 LMSA
SKT-160 / 180 TTMS / TTSY
LM 1600 / 1800 TTSY
Hwacheon CUTEX-160 / 240 / T2

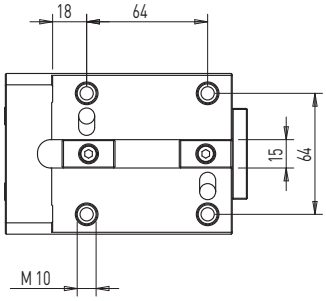

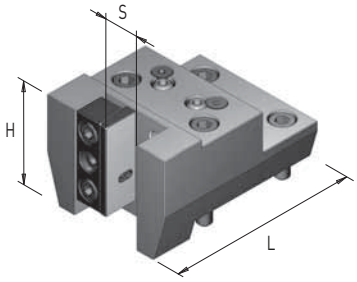

3

Art. / Code	Art. / Code DOOSAN	S	H	L	Coolant IN	Coolant OUT
8D6V40	/	20x20	73	104	✗	✓
8D6V50	L31560517B	25x25	60	126	✗	✓
8D6V50 L	/	25x25	69	137	✗	✓

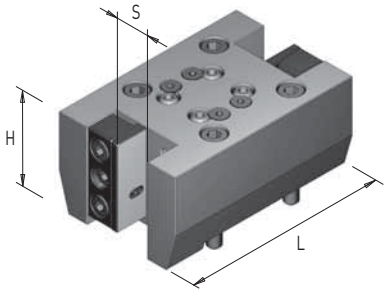

4

Art. / Code	Art. / Code DOOSAN	S	H	L	Coolant IN	Coolant OUT
8D6D50	L61590347A	25x25	65	148	✗	✓

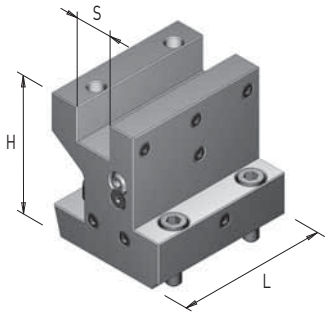

5

Art. / Code	Art. / Code DOOSAN	S	H	L	Coolant IN	Coolant OUT
8D6C25	L31560537C	25x25	95	105	✗	✓

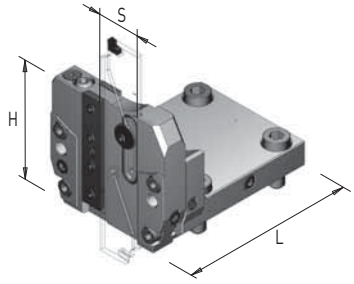

6

Art. / Code	Art. / Code DOOSAN	S	H	L	Coolant IN	Coolant OUT
8D6B32	/	ISCAR32	78	119	✓	✓
8D6B32 H103	/	ISCAR32	103	119	✓	✓

MODELLI / Models
LYNX220 (M, MS, LM)
PUMA MX 1600 (ST)

MACCHINE COMPATIBILI / Compatibility machines
Samsung PL 1600M/MC
Hardinge T-42 super precision

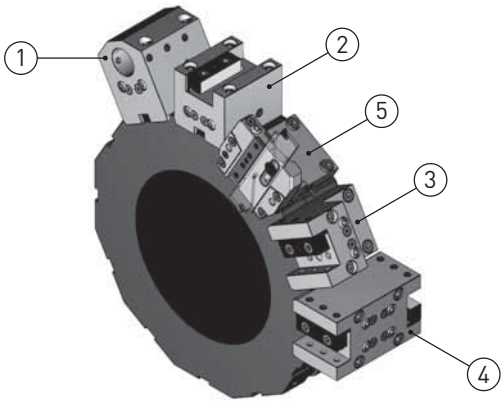

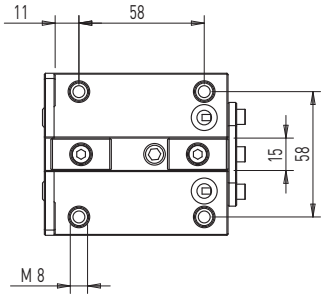

1

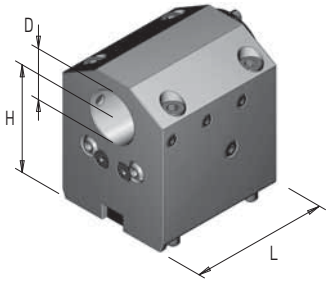

Art. / Code	Art. / Code DOOSAN	D	H	L	Coolant IN	Coolant OUT
7D5C32 H65	/	32	65	85	✓	✓
7D5C32 R H65	/	32	65	85	✓	✓

2

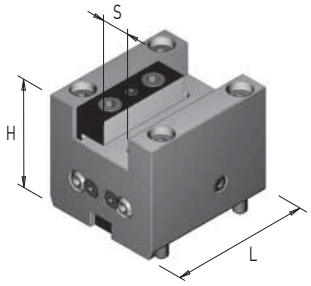

Art. / Code	Art. / Code DOOSAN	S	H	L	Coolant IN	Coolant OUT
8D5C40	/	20x20	65	85	✗	✓

3

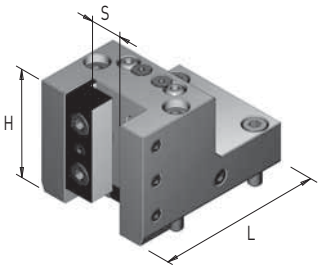

Art. / Code	Art. / Code DOOSAN	S	H	L	Coolant IN	Coolant OUT
8D5V40	/	20x20	65	102	✗	✓

4

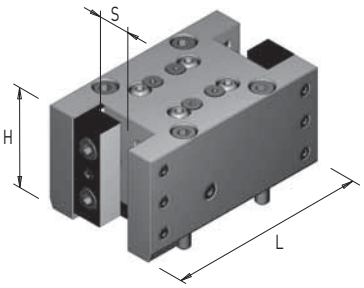

Art. / Code	Art. / Code DOOSAN	S	H	L	Coolant IN	Coolant OUT
8D5D40	/	20x20	60	124	✗	✓

5

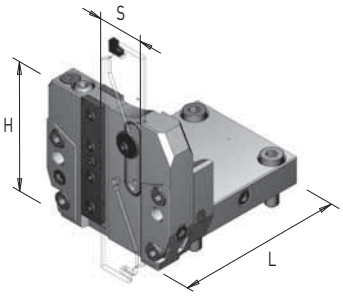

Art. / Code	Art. / Code DOOSAN	S	H	L	Coolant IN	Coolant OUT
8D5B32	/	ISCAR32	79	105	✓	✓

MODELLI / Models
SQT15-18 M/MS/MY/MSY 12 STAZIONI
SQT200-250 M/MS/MY/MSY 12 STAZIONI
QT NEXUS 200-250 M/MS/MY/MSY 12 STAZIONI
QT NEXUS 200II-250II M/MS/MY/MSY 12 STAZIONI
SUPER QUADREX 200-250M

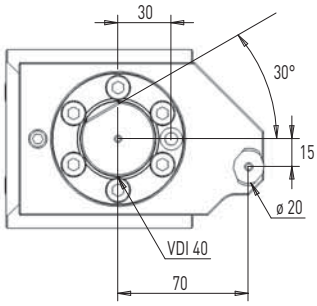

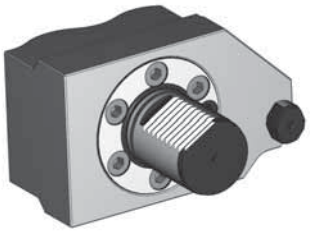

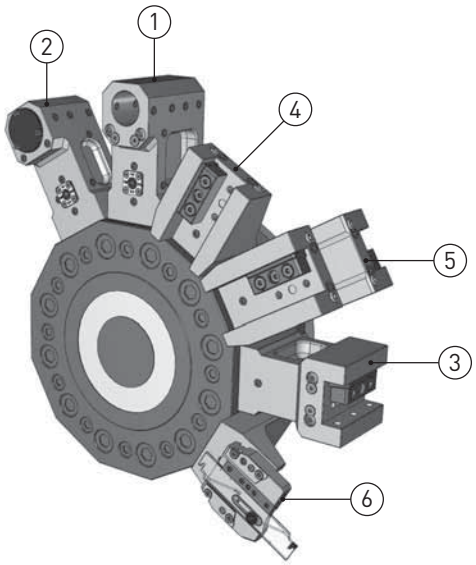

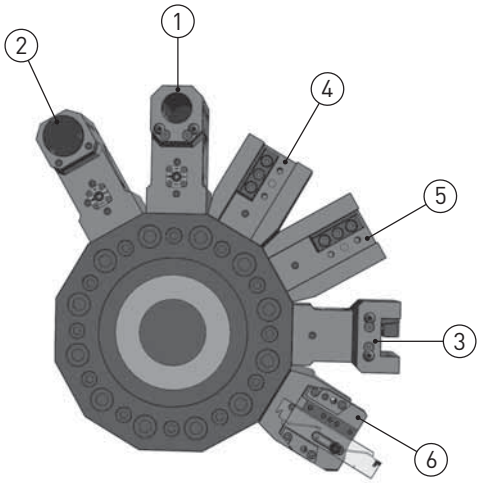

1

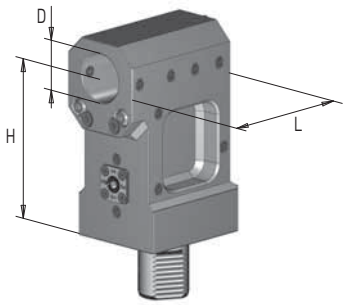

Art. / Code	Art. / Code MAZAK	D	H	L	Coolant IN	Coolant OUT
7Z6C40 H140	/	40	140	110	✓	✓

2

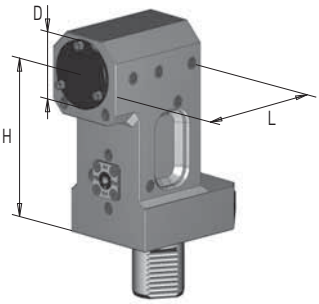

Art. / Code	Art. / Code MAZAK	D	H	L	Coolant IN	Coolant OUT
7Z6A40 H140	/	40	140	90	✓	✓

MODELLI / Models
SQT15-18 M/MS/MY/MSY 12 STAZIONI
SQT200-250 M/MS/MY/MSY 12 STAZIONI
QT NEXUS 200-250 M/MS/MY/MSY 12 STAZIONI
QT NEXUS 200II-250II M/MS/MY/MSY 12 STAZIONI
SUPER QUADREX 200-250M

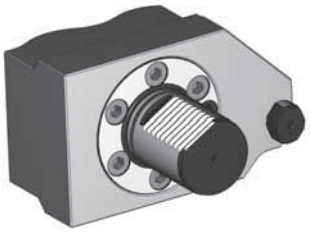

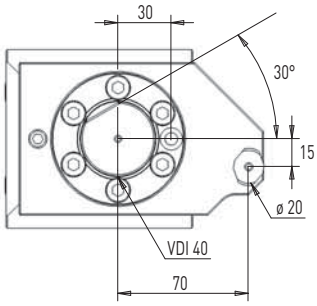

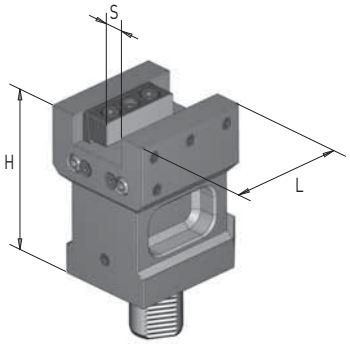

3

Art. / Code	Art. / Code MAZAK	S	H	L	Coolant IN	Coolant OUT
8Z6C50	/	25x25	143	100	✗	✓

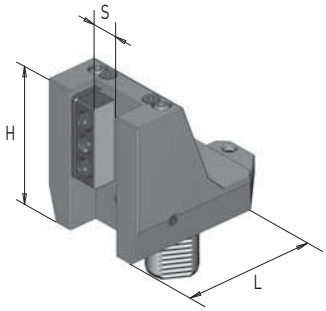

4

Art. / Code	Art. / Code MAZAK	S	H	L	Coolant IN	Coolant OUT
8Z6V50	/	25x25	120	110	✗	✓

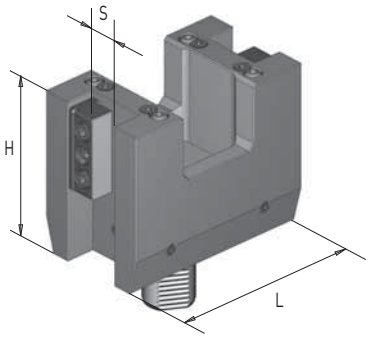

5

Art. / Code	Art. / Code MAZAK	S	H	L	Coolant IN	Coolant OUT
8Z6D50	/	25x25	136	166	✗	✓

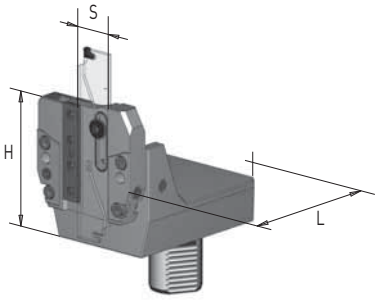

6

Art. / Code	Art. / Code MAZAK	S	H	L	Coolant IN	Coolant OUT
8Z6B32	/	ISCAR32	120	138	✓	✓

MODELLI / Models
B301 - B445 - B470 - B501 (Y - S) - B510 - B545 - B550 - B565 - B650 - B658
B1200 - B446 - B465 - B754 - B765 - B750 (16 station turret) - B1250 (16 station turret)

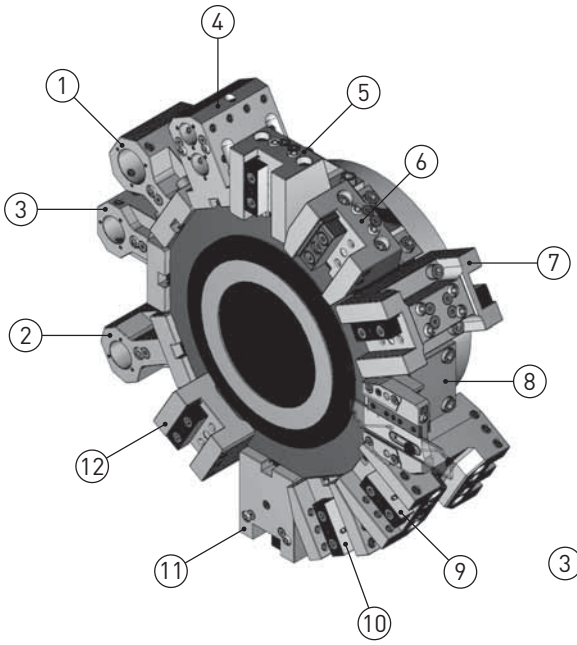

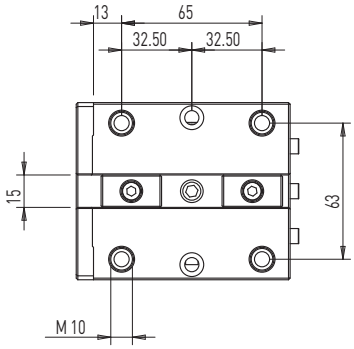

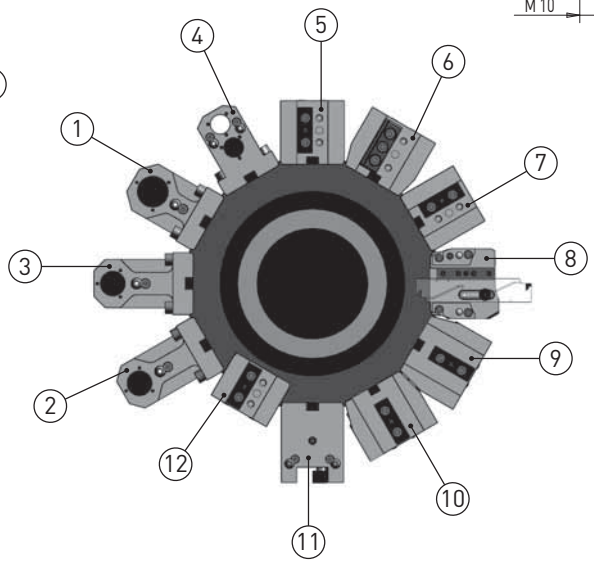

1

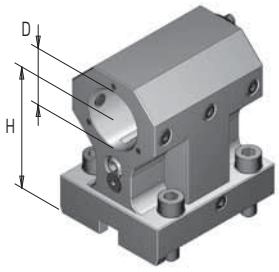

Art. / Code	Art. / Code BIGLIA	D	H	Coolant IN	Coolant OUT
7B6C32	10.57.75.00	32	80	✓	✓
7B6C32 R	10.57.75.00	32	80	✓	✓
7B6C40	10.88.15.00	40	80	✓	✓
7B6C40 R	10.88.15.00	40	80	✓	✓

2

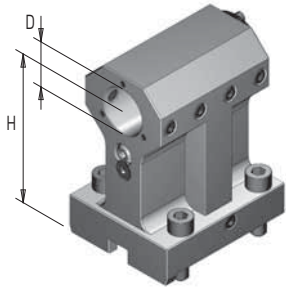

Art. / Code	Art. / Code BIGLIA	D	H	Coolant IN	Coolant OUT
7B6C32 H100	10.88.27.00	32	100	✓	✓
7B6C32 R H100	10.88.27.00	32	100	✓	✓

3

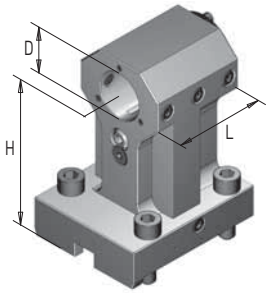

Art. / Code	Art. / Code BIGLIA	D	H	L	Coolant IN	Coolant OUT
7B6A32 H100	10.88.28.00	32	100	66	✓	✓
7B6A32 R H100	10.88.28.00	32	100	66	✓	✓

MODELLI / Models
B301 - B445 - B470 - B501 (Y - S) - B510 - B545 - B550 - B565 - B650 - B658
B1200 - B446 - B465 - B754 - B765 - B750 (16 station turret) - B1250 (16 station turret)

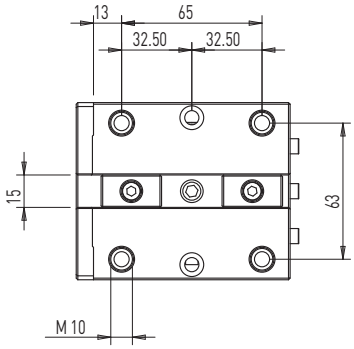

4

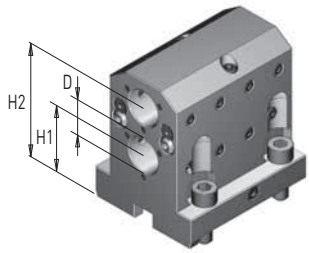

Art. / Code	Art. / Code BIGLIA	D	H1	H2	Coolant IN	Coolant OUT
7B6D25	41.03.29.00	25	45	80	✓	✓
7B6D25 R	41.03.29.00	25	45	80	✓	✓

5

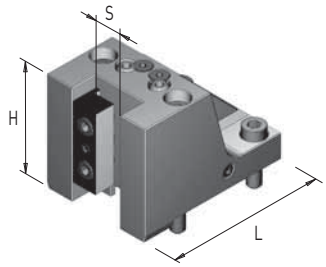

Art. / Code	Art. / Code BIGLIA	S	H	L	Coolant IN	Coolant OUT
8B6V40	10.57.60.00	20x20	79	116	✗	✓

6

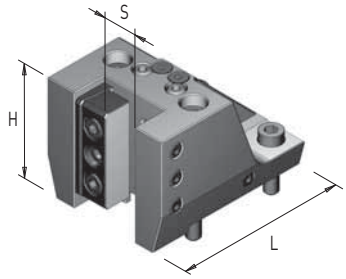

Art. / Code	Art. / Code BIGLIA	S	H	L	Coolant IN	Coolant OUT
8B6V50	10.88.16.00	25x25	79	121	✗	✓

7

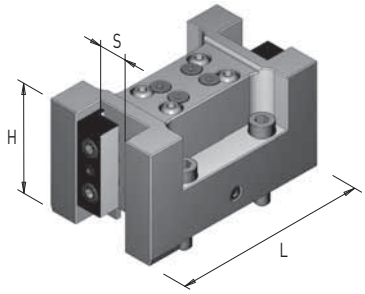

Art. / Code	Art. / Code BIGLIA	S	H	L	Coolant IN	Coolant OUT
8B6D40	10.57.76.00	20x20	76	139	✗	✓

8

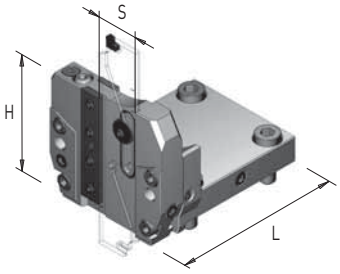

Art. / Code	Art. / Code BIGLIA	S	H	L	Coolant IN	Coolant OUT
8B6B32	/	ISCAR32	79	116	✓	✓

MODELLI / Models
B301 - B445 - B470 - B501 (Y - S) - B510 - B545 - B550 - B565 - B650 - B658
B1200 - B446 - B465 - B754 - B765 - B750 (16 station turret) - B1250 (16 station turret)

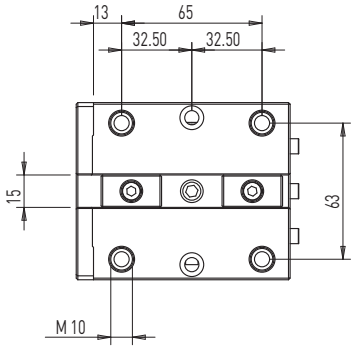

9

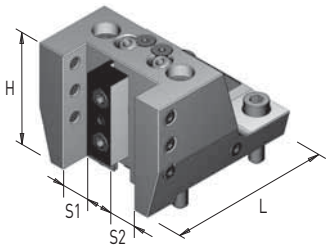

Art. / Code	Art. / Code BIGLIA	S1	S2	H	L	Coolant IN	Coolant OUT
8B6V20 D	41.03.25.00	20x20	20x20	79	116	✗	✓

10

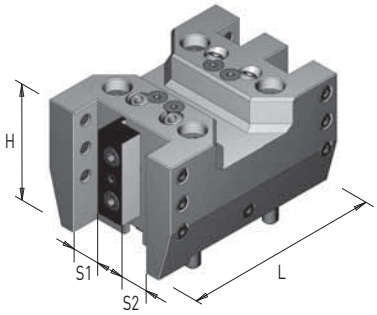

Art. / Code	Art. / Code BIGLIA	S1	S2	H	L	Coolant IN	Coolant OUT
8B6D20 Q	/	20x20	20x20	81	140	✗	✓

11

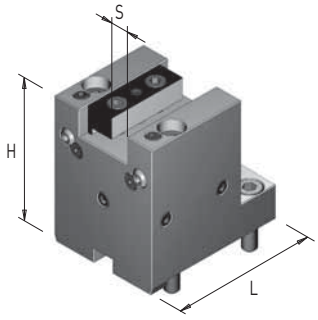

Art. / Code	Art. / Code BIGLIA	S	H	L	Coolant IN	Coolant OUT
8B6C40	41.03.19.00	20x20	100	104	✗	✓

12

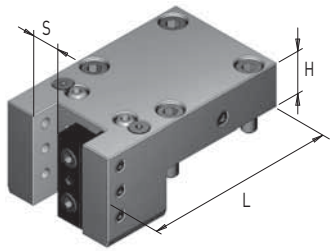

Art. / Code	Art. / Code BIGLIA	S	H	L	Coolant IN	Coolant OUT
8B6V40 L	/	20X20	32	40	✗	✓

MODELLI / Models
B436 Y2

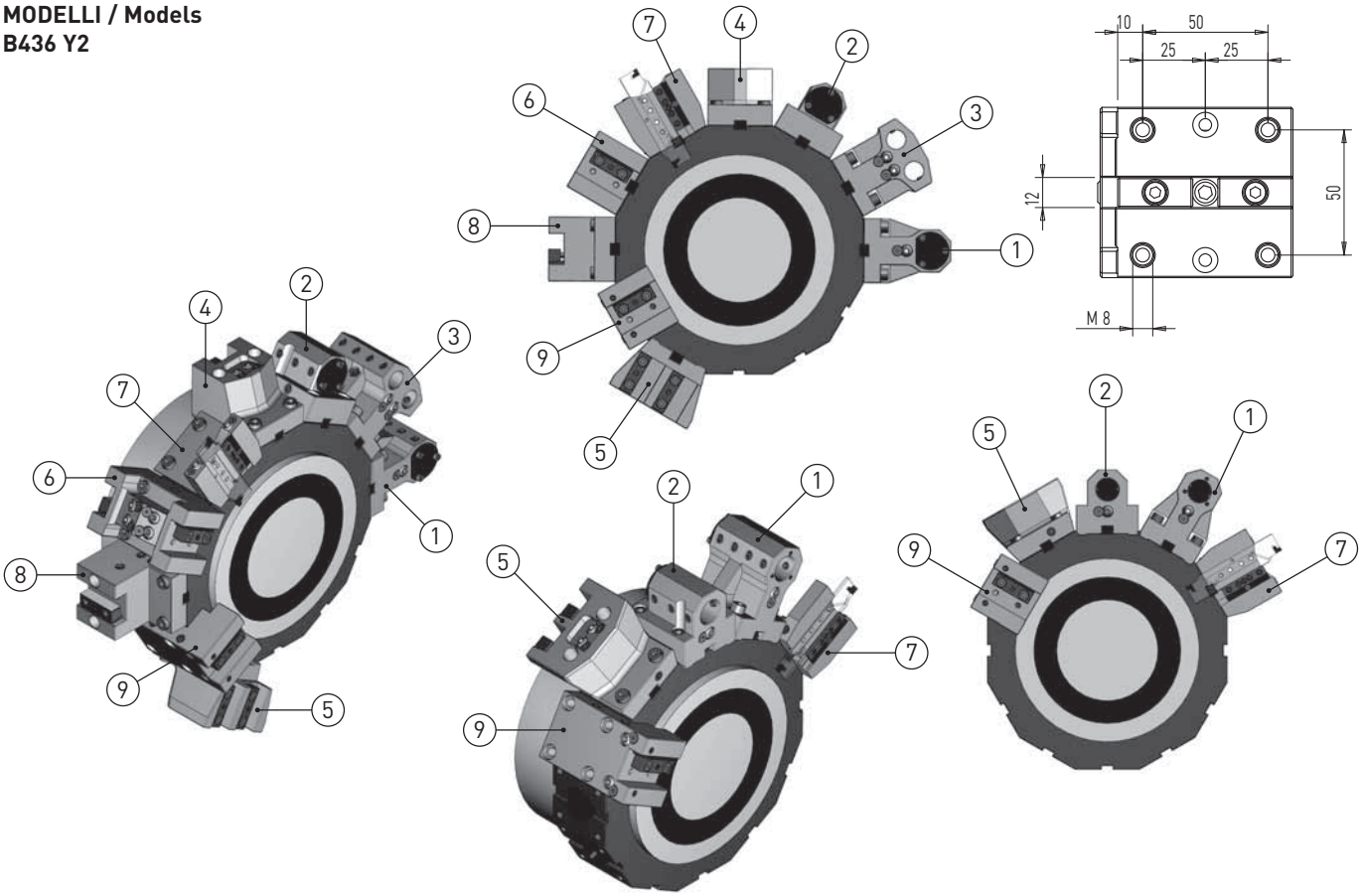

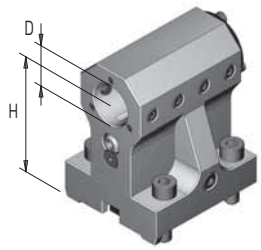

1

Art. / Code	Art. / Code BIGLIA	D	H	Coolant IN	Coolant OUT
7B4C20 H70	0088-00003	20	70	✓	✓
7B4C20 R H70	0088-00003	20	70	✓	✓
7B4C20 H75	/	20	75	✓	✓
7B4C20 R H75	/	20	75	✓	✓
7B4C25 H70	D25.0088-00003	25	70	✓	✓
7B4C25 R H70	D25.0088-00003	25	70	✓	✓

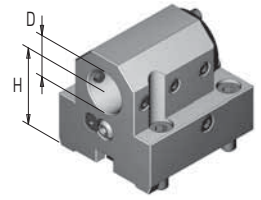

2

Art. / Code	Art. / Code BIGLIA	D	H	Coolant IN	Coolant OUT
7B4C20 H45	0088-00019	20	45	✓	✓
7B4C20 R H45	0088-00019	20	45	✓	✓
7B4C25 H45	D25.0088-00019	25	45	✓	✓
7B4C25 R H45	D25.0088-00019	25	45	✓	✓

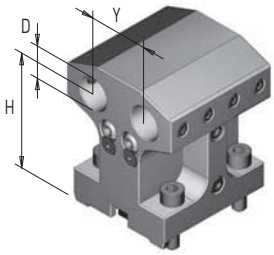

3

Art. / Code	Art. / Code BIGLIA	D	H	Y	Coolant IN	Coolant OUT
7B4D20 Y38	0088-00010	20	70	38	✗	✓

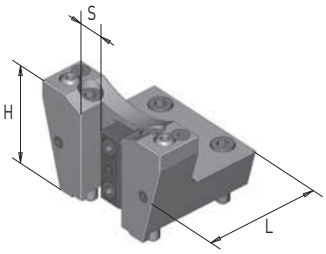

4B

Art. / Code	Art. / Code BIGLIA	S	H	L	Coolant IN	Coolant OUT
8B4B16	0088-00008	16x16	60	75	✗	✓

MODELLI / Models
B436 Y2

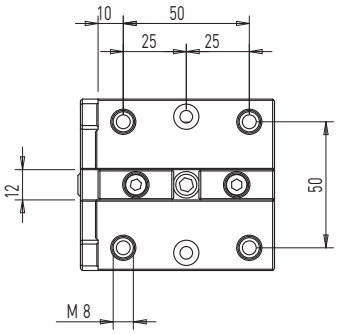

4

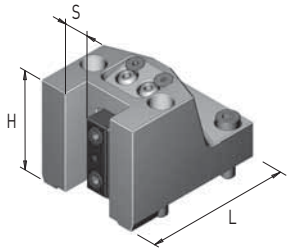

Art. / Code	Art. / Code BIGLIA	S	H	L	Coolant IN	Coolant OUT
8B4V32	0088-00004	16x16	60	90	✗	✓

5

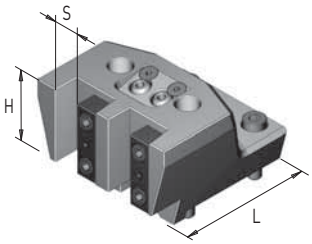

Art. / Code	Art. / Code BIGLIA	S	H	L	Coolant IN	Coolant OUT
8B4V16 D	0088-00011	16x16	60	100	✗	✓

6

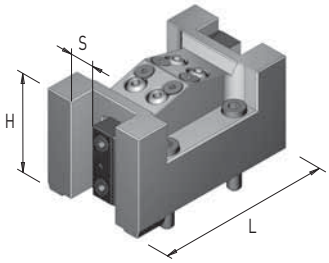

Art. / Code	Art. / Code BIGLIA	S	H	L	Coolant IN	Coolant OUT
8B4D32	088-00005	16x16	60	110	✗	✓

7

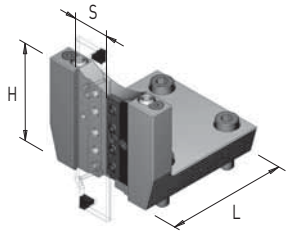

Art. / Code	Art. / Code BIGLIA	S	H	L	Coolant IN	Coolant OUT
8B4B26 B	/	ISCAR26	66	82	✗	✓

8

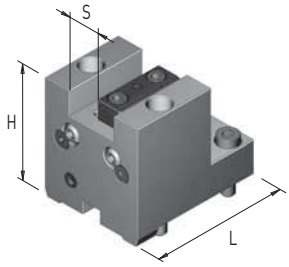

Art. / Code	Art. / Code BIGLIA	S	H	L	Coolant IN	Coolant OUT
8B4C32	0088-00014	16x16	70	85	✗	✓

9

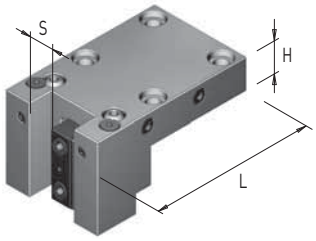

Art. / Code	Art. / Code BIGLIA	S	H	L	Coolant IN	Coolant OUT
8B4V32 L	088-00006	16x16	22	110	✗	✓

MODELLI / Models
WT 150/250
WTW 150
WTS 150
WT 20II (M, MY)
TW 10
SUPER NTJ/NTM3
SC 150/250

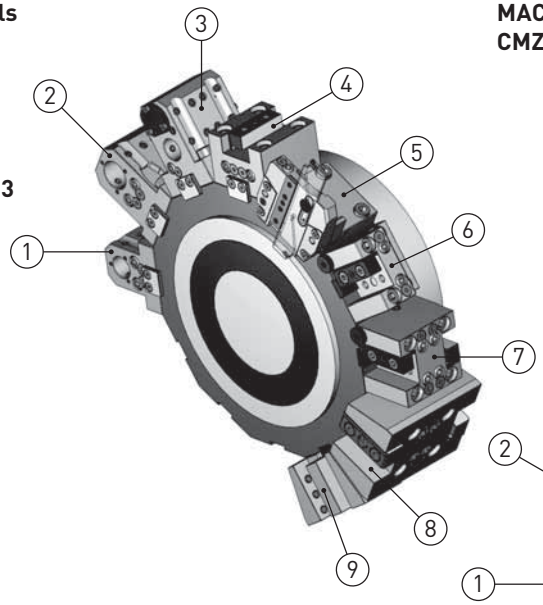

MACCHINE COMPATIBILI / Compatibility machines
CMZ TX 52/66

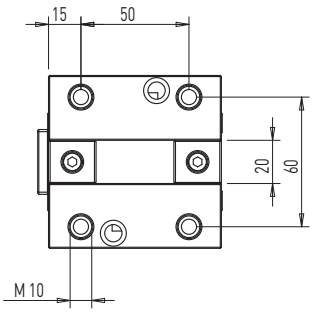

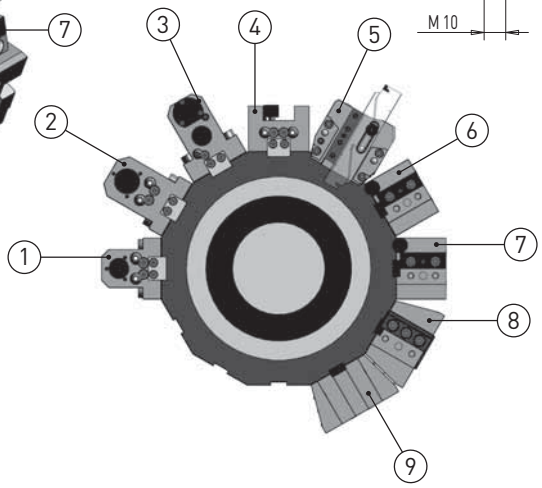

1

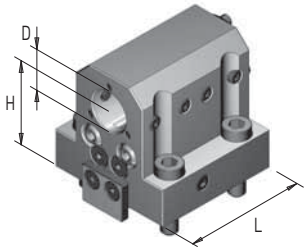

Art. / Code	Art. / Code NAKAMURA	D	H	L	Coolant IN	Coolant OUT
7N4C25 H55	/	25	55	80	✓	✓
7N4C25 R H55	/	25	55	80	✓	✓

2

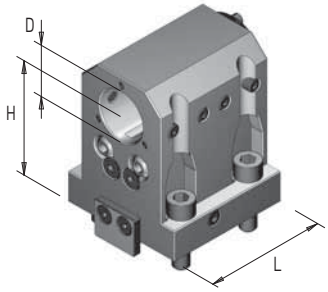

Art. / Code	Art. / Code NAKAMURA	D	H	L	Coolant IN	Coolant OUT
7N4C32 H75	/	32	75	80	✓	✓
7N4C32 R H75	/	32	75	80	✓	✓
7N4C40 H75	/	40	75	80	✓	✓
7N4C40 R H75	/	40	75	80	✓	✓

3

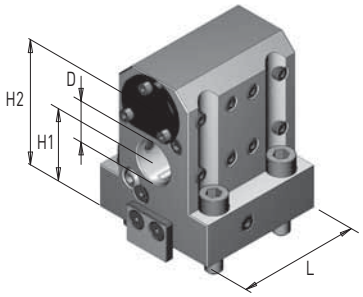

Art. / Code	Art. / Code NAKAMURA	D	H1	H2	L	Coolant IN	Coolant OUT
7N4D25	/	25	47.5	82.5	80	✓	✓
7N4D25 R	/	25	47.5	82.5	80	✓	✓

4

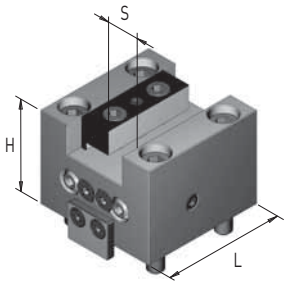

Art. / Code	Art. / Code NAKAMURA	S	H	L	Coolant IN	Coolant OUT
8N4C40	/	20x20	60	80	✗	✓

MODELLI / Models
WT 150/250
WTW 150
WTS 150
WT 20II (M, MY)
TW 10
SUPER NTJ/NTM3
SC 150/250

MACCHINE COMPATIBILI / Compatibility machines
CMZ TX 52/66

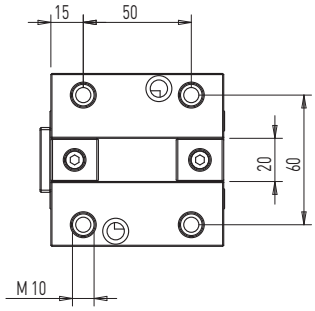

5

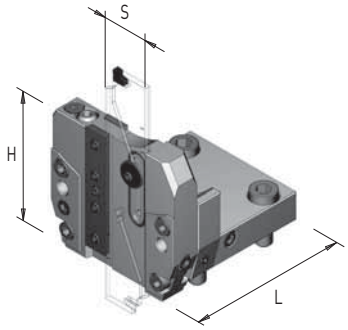

Art. / Code	Art. / Code NAKAMURA	S	H	L	Coolant IN	Coolant OUT
8N4B32	/	ISCAR32	78	99	✓	✓

6

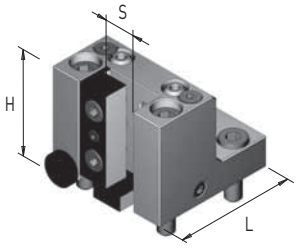

Art. / Code	Art. / Code NAKAMURA	S	H	L	Coolant IN	Coolant OUT
8N4V40	/	20x20	65	80	✗	✓

7

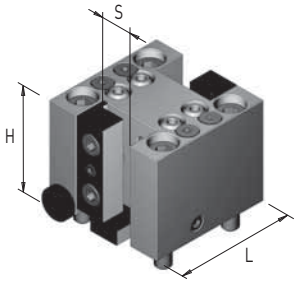

Art. / Code	Art. / Code NAKAMURA	S	H	L	Coolant IN	Coolant OUT
8N4D40	/	20x20	65	80	✗	✓

8

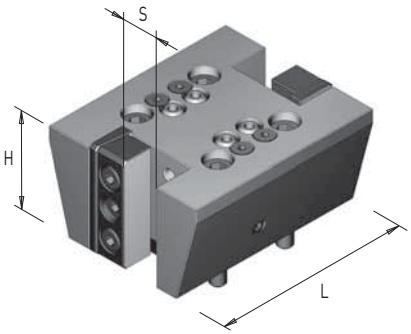

Art. / Code	Art. / Code NAKAMURA	S	H	L	Coolant IN	Coolant OUT
8N4D50	/	25x25	65	132	✗	✓

9

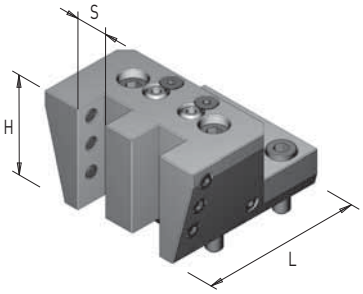

Art. / Code	Art. / Code NAKAMURA	S	H	L	Coolant IN	Coolant OUT
8N4V20 D	/	20x20	65	106	✗	✓

MODELLI / Models
WT 100 - WY 100
NTY 3 - NTJ 100

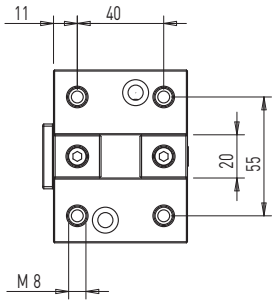

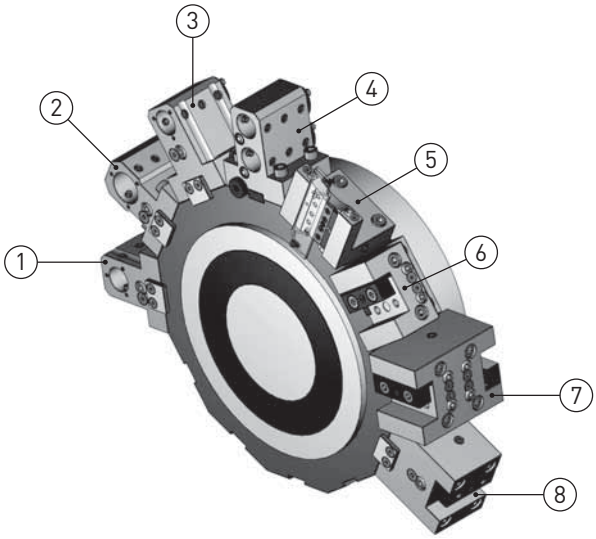

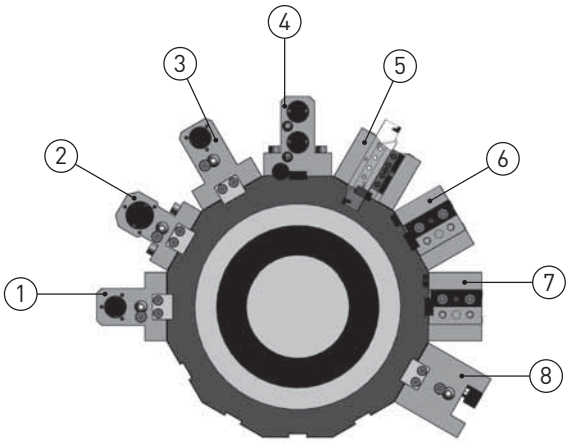

1

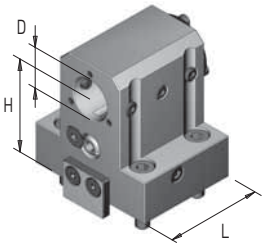

Art. / Code	Art. / Code NAKAMURA	D	H	L	Coolant IN	Coolant OUT
7N3C25 H60	/	25	60	62	✓	✓
7N3C25 R H60	/	25	60	62	✓	✓

2

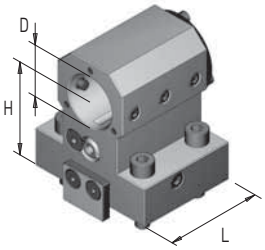

Art. / Code	Art. / Code NAKAMURA	D	H	L	Coolant IN	Coolant OUT
7N3C32 H60	/	32	60	62	✓	✓
7N3C32 R H60	/	32	60	62	✓	✓

3

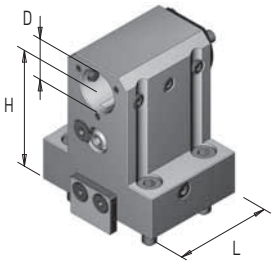

Art. / Code	Art. / Code NAKAMURA	D	H	L	Coolant IN	Coolant OUT
7N3C25 H75	/	25	75	62	✓	✓
7N3C25 R H75	/	25	75	62	✓	✓

MODELLI / Models
WT 100 - WY 100
NTY 3 - NTJ 100

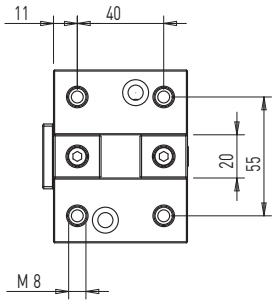

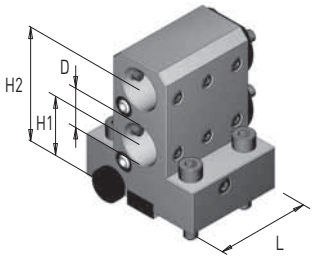

4

Art. / Code	Art. / Code NAKAMURA	D	H1	H2	L	Coolant IN	Coolant OUT
7N3D25	/	25	39	75	62	✓	✓

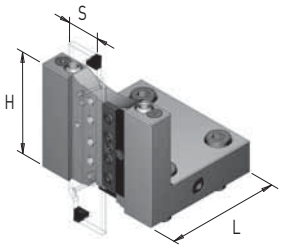

5

Art. / Code	Art. / Code NAKAMURA	S	H	L	Coolant IN	Coolant OUT
8N3B26 B	/	ISCAR26	66	73	✗	✓

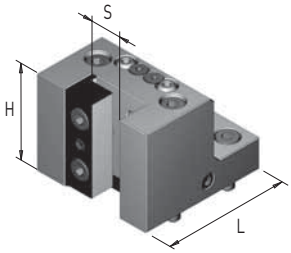

6

Art. / Code	Art. / Code NAKAMURA	S	H	L	Coolant IN	Coolant OUT
8N3V40	/	20x20	62	83	✗	✓

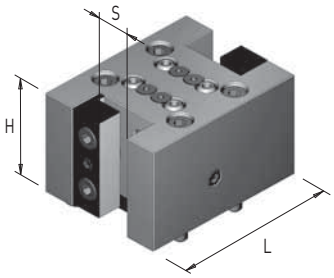

7

Art. / Code	Art. / Code NAKAMURA	S	H	L	Coolant IN	Coolant OUT
8N3D40	/	20x20	62	104	✗	✓

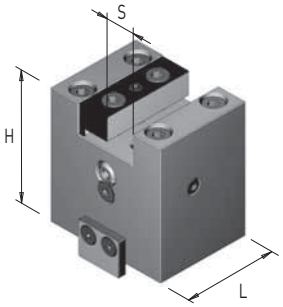

8

Art. / Code	Art. / Code NAKAMURA	S	H	L	Coolant IN	Coolant OUT
8N3C40	/	20x20	85	62	✗	✓

MODELLI / Models
TA / TD / TC / TL
TBI-520 / TBI-480

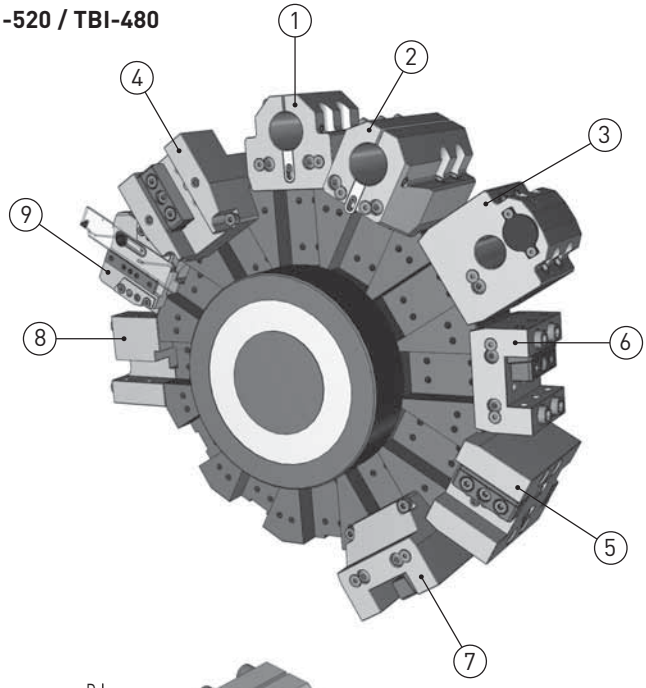

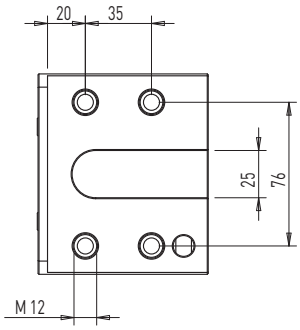

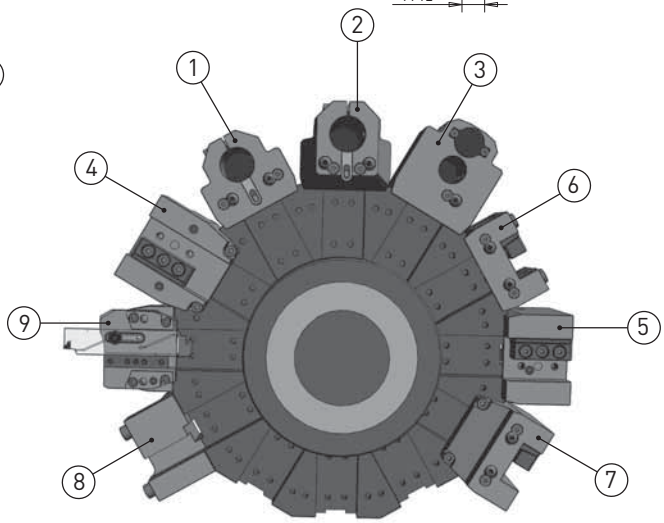

1

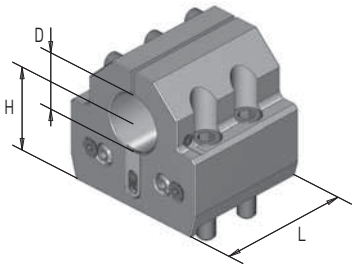

Art. / Code	Art. / Code CMZ	D	H	Y	Coolant IN	Coolant OUT
7C7C40B H55	TD/10300/40	40	55	90	✓	✓

2

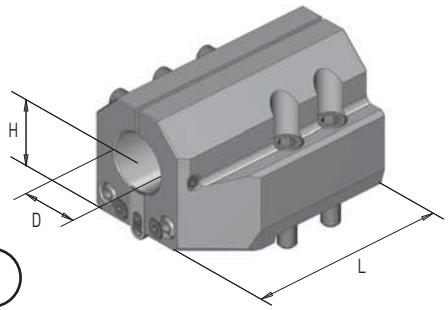

Art. / Code	Art. / Code CMZ	D	H	Y	Coolant IN	Coolant OUT
7C7L40B H55	TD/10300/41	40	55	150	✓	✓

3

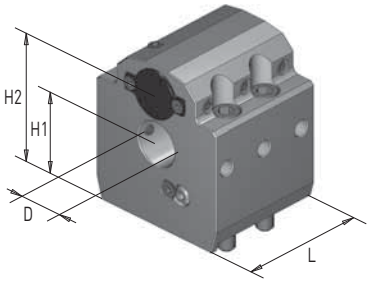

Art. / Code	Art. / Code CMZ	D	H1	H2	L	Coolant IN	Coolant OUT
7C7D32	TD/10300/43	32	55	92,5	90	✓	✓

4

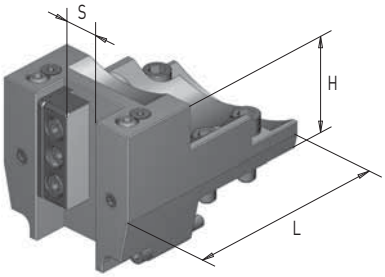

Art. / Code	Art. / Code CMZ	S	H	L	Coolant IN	Coolant OUT
8C7V50	TD/10300/45	25x25	72	150	✗	✓

MODELLI / Models
TA / TD / TC / TL
TBI-520 / TBI-480

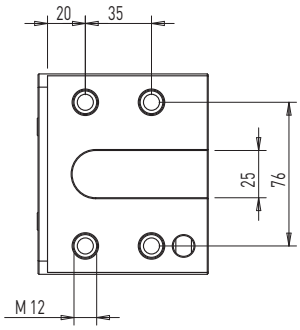

5

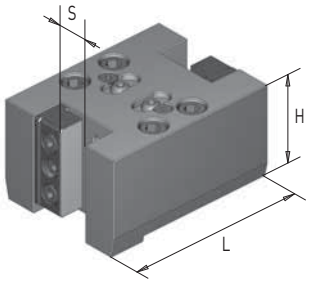

Art. / Code	Art. / Code CMZ	S	H	L	Coolant IN	Coolant OUT
8C7D50	TD/10300/46	25x25	72	140	✗	✓

6

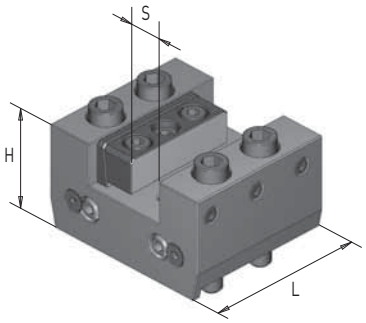

Art. / Code	Art. / Code CMZ	S	H	L	Coolant IN	Coolant OUT
8C7C50	TD/10300/48	25x25	55	90	✗	✓

7

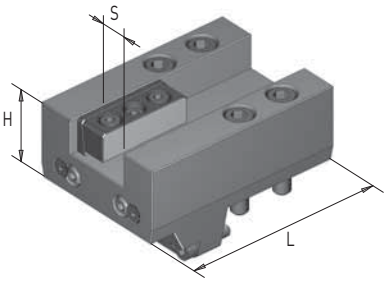

Art. / Code	Art. / Code CMZ	S	H	L	Coolant IN	Coolant OUT
8C7L50	TD/10300/47	25x25	55	150	✗	✓

8

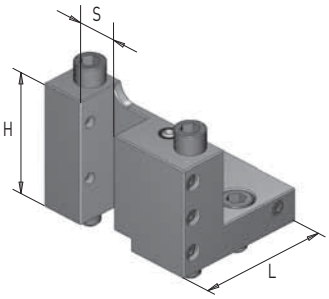

Art. / Code	Art. / Code CMZ	S	H	L	Coolant IN	Coolant OUT
8C7B25	TD/10300/49	25x25	78	85	✗	✓

9

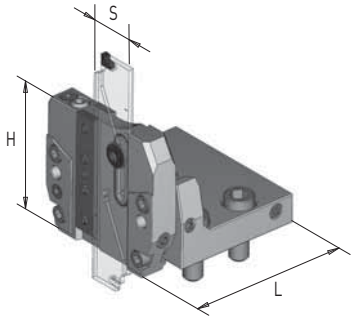

Art. / Code	Art. / Code CMZ	S	H	L	Coolant IN	Coolant OUT
8C7B32	TD/10300/44	32	85	104	✓	✓

MODELLI / Models
TBI 520
TL 20/25
TC 15/20/25/30/35
TA 15M/Y/MS/MY/YS - TA 20M/Y/MS/MY/YS
TA 25M/Y/MS/MY/YS - TA 30M/Y/MS/MY/YS

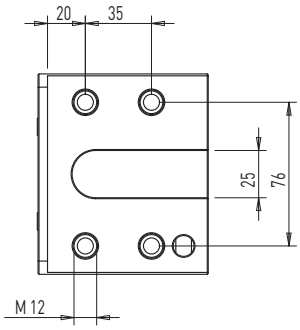

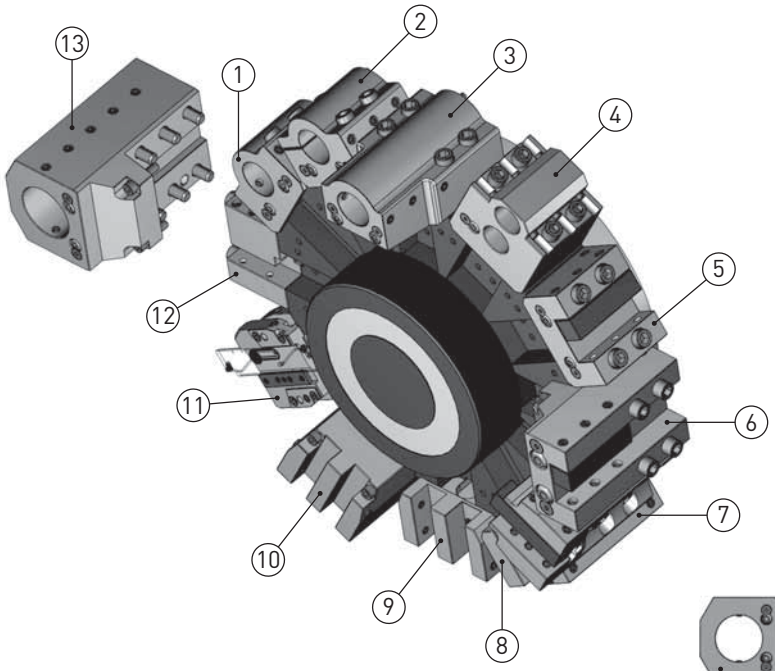

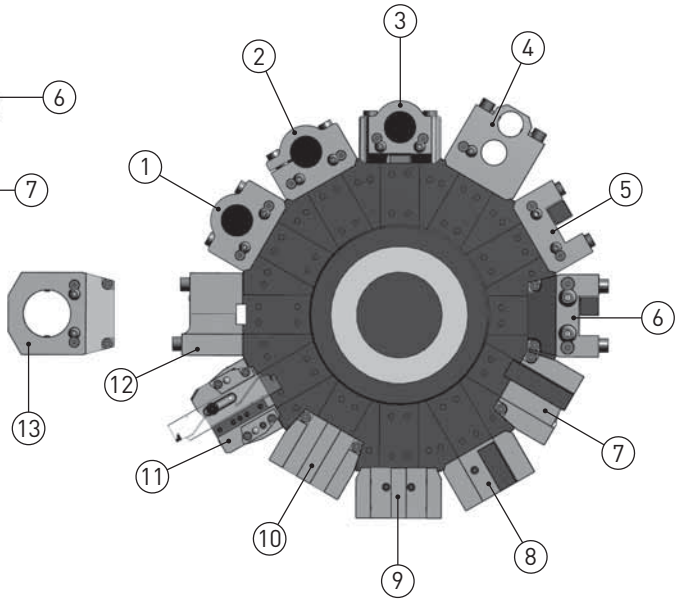

1

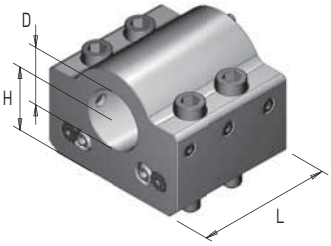

Art. / Code	Art. / Code CMZ	D	H	L	Coolant IN	Coolant OUT
7C6C40	TL20/10000/09	40	40	90	✓	✓
7C6C40 R	TL20/10000/12	40	40	90	✓	✓
7C6C50	TL20/10000/40	50	40	90	✓	✓
7C6C50 R	TL20/10000/40	50	40	90	✓	✓

2

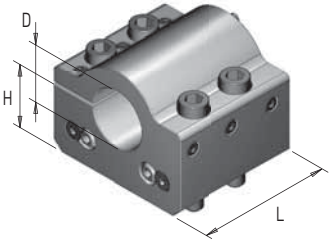

Art. / Code	Art. / Code CMZ	D	H	L	Coolant IN	Coolant OUT
7C6C40 B	/	40	40	90	✗	✓

3

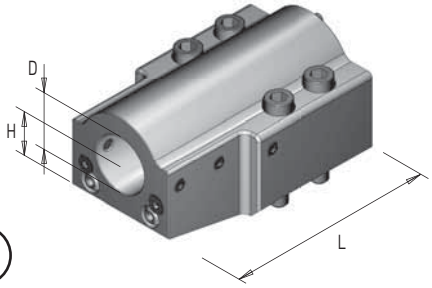

Art. / Code	Art. / Code CMZ	D	H	L	Coolant IN	Coolant OUT
7C6L40	TL20/10000/10	40	40	160	✓	✓
7C6L40 R	TL20/10000/10	40	40	160	✓	✓
7C6L50	TL20/10000/39	50	40	160	✓	✓
7C6L50 R	TL20/10000/39	50	40	160	✓	✓

MODELLI / Models
TBI 520
TL 20/25
TC 15/20/25/30/35
TA 15M/Y/MS/MY/YS - TA 20M/Y/MS/MY/YS
TA 25M/Y/MS/MY/YS - TA 30M/Y/MS/MY/YS

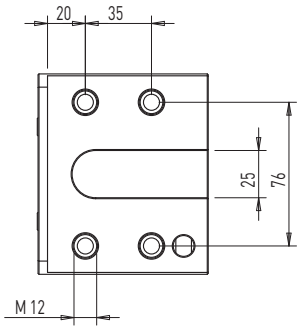

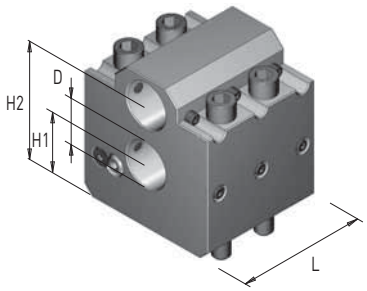

4

Art. / Code	Art. / Code CMZ	D	H1	H2	L	Coolant IN	Coolant OUT
7C6D32	TL20/10000/11	32	40	82	88	✗	✓

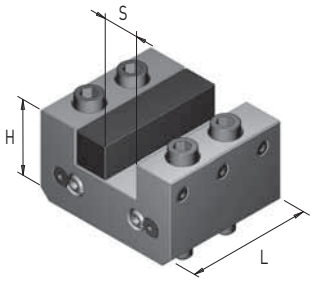

5

Art. / Code	Art. / Code CMZ	S	H	L	Coolant IN	Coolant OUT
8C6C50	TL20/10000/08	25x25	50	90	✗	✓
8C6L50	/	25x25	60	160	✗	✓

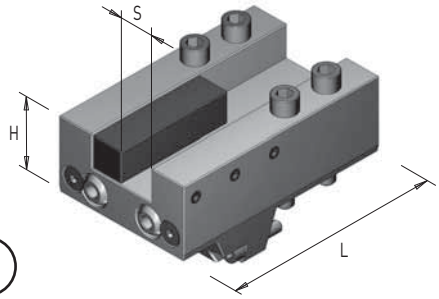

6

Art. / Code	Art. / Code CMZ	S	H	L	Coolant IN	Coolant OUT
8C8L50	TC35/10000/57	25x25	55	165	✗	✓

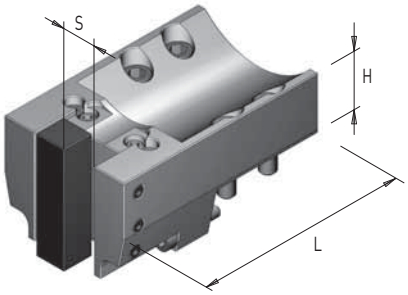

7

Art. / Code	Art. / Code CMZ	S	H	L	Coolant IN	Coolant OUT
8C6V50	TL20/10000/06	25x25	44	130	✗	✓
8C6V50 L	TL20/10000/45	25x25	44	165	✗	✓

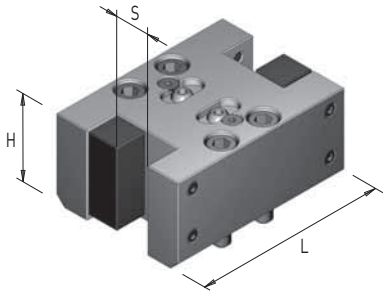

8

Art. / Code	Art. / Code CMZ	S	H	L	Coolant IN	Coolant OUT
8C6D50	TL20/10000/07	25x25	60	139	✗	✓

MODELLI / Models
TBI 520
TL 20/25
TC 15/20/25/30/35
TA 15M/Y/MS/MY/YS - TA 20M/Y/MS/MY/YS
TA 25M/Y/MS/MY/YS - TA 30M/Y/MS/MY/YS

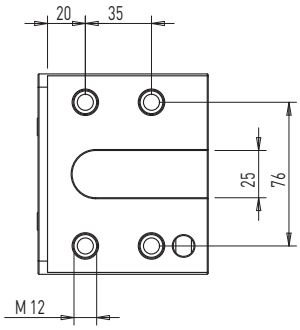

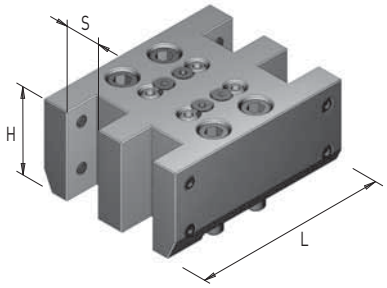

9

Art. / Code	Art. / Code CMZ	S	H	L	Coolant IN	Coolant OUT
8C6D20 Q	/	20x20	60	139	✗	✓
8C6D25 Q	/	25x25	60	139	✗	✓

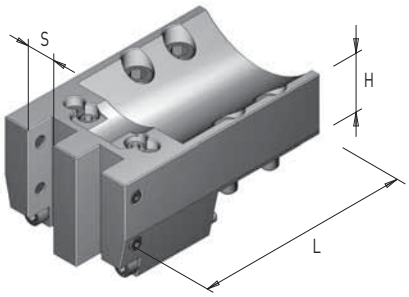

10

Art. / Code	Art. / Code CMZ	S	H	L	Coolant IN	Coolant OUT
8C6V20 D	/	20x20	44	165	✗	✓

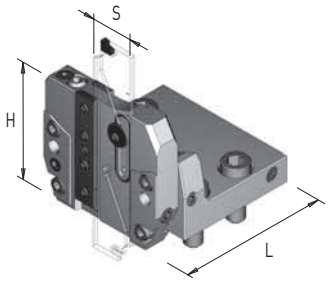

11

Art. / Code	Art. / Code CMZ	S	H	L	Coolant IN	Coolant OUT
8C6B32	TL20/10000/44	ISCAR32	80	103	✓	✓

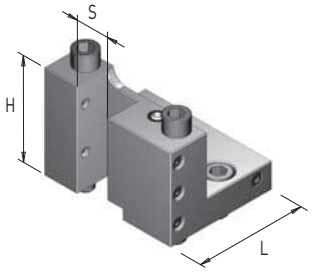

12

Art. / Code	Art. / Code CMZ	S	H	L	Coolant IN	Coolant OUT
8C6B25	TL20/10000/13	25x25	78	85	✗	✓

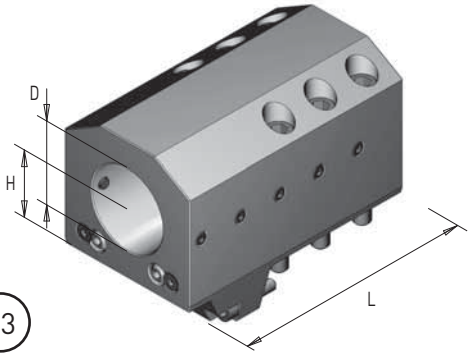

13

Art. / Code	Art. / Code CMZ	D	H	L	Coolant IN	Coolant OUT
7C8L60	TC35/10000/54	60	50	180	✓	✓

MODELLI / Models
TL 15T/M/TM/S/MS
TB46/67 M/CM

MACCHINE COMPATIBILI / Compatibility machines
Miyano ABX 51/64 THY / SYY

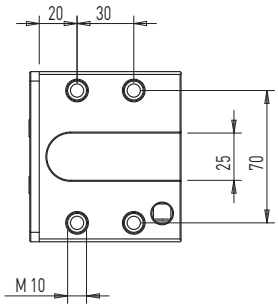

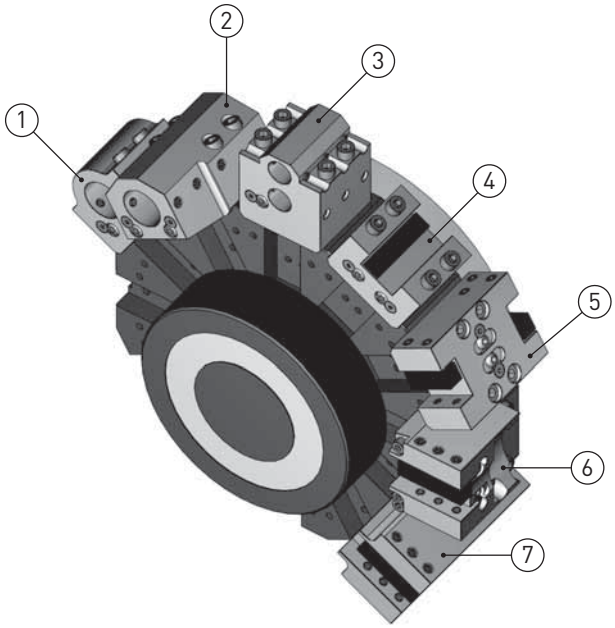

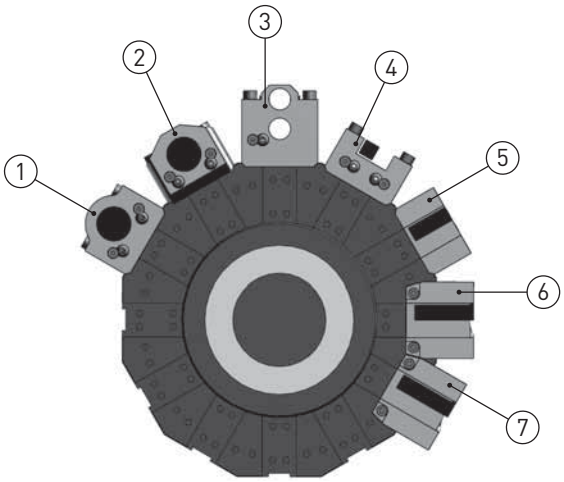

1

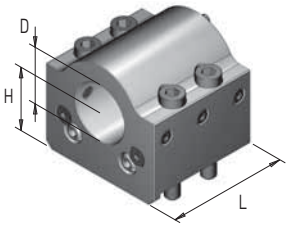

Art. / Code	Art. / Code CMZ	D	H	L	Coolant IN	Coolant OUT
7C3C40	TL15/10000/09	40	40	80	✓	✓
7C3C40 R	TL15/10000/12	40	40	80	✓	✓

2

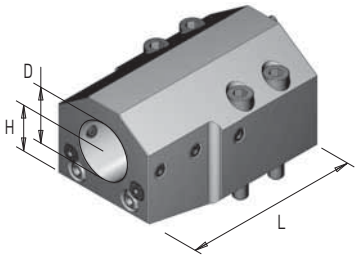

Art. / Code	Art. / Code CMZ	D	H	L	Coolant IN	Coolant OUT
7C3L40	TL15/10000/10	40	40	135	✓	✓
7C3L40 R	TL15/10000/10	40	40	135	✓	✓

3

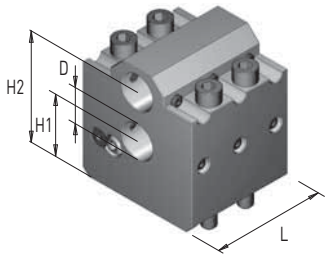

Art. / Code	Art. / Code CMZ	D	H1	H2	L	Coolant IN	Coolant OUT
7C3D25	TL15/10000/11	25	40	75	79	✗	✓

MODELLI / Models
TL 15T/M/TM/S/MS
TB46/67 M/CM

MACCHINE COMPATIBILI / Compatibility machines
Miyano ABX 51/64 THY / SYY

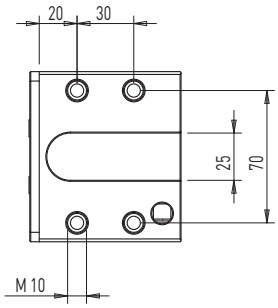

4

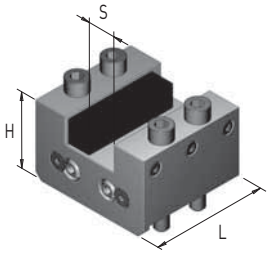

Art. / Code	Art. / Code CMZ	S	H	L	Coolant IN	Coolant OUT
8C3C40	TL15/10000/08	20x20	50	80	✗	✓

5

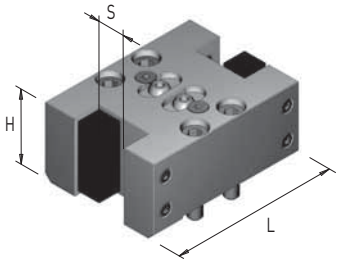

Art. / Code	Art. / Code CMZ	S	H	L	Coolant IN	Coolant OUT
8C3D40	TL15/10000/07	20x20	50	120	✗	✓

6

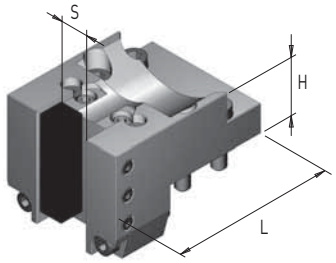

Art. / Code	Art. / Code CMZ	S	H	L	Coolant IN	Coolant OUT
8C3T40	TL15/10000/06	20x20	44	120	✗	✓

7

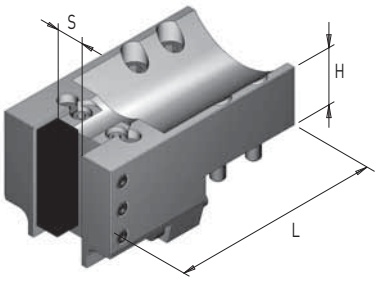

Art. / Code	Art. / Code CMZ	S	H	L	Coolant IN	Coolant OUT
8C3V40	TL15/10000/45	20x20	44	155	✗	✓

MODELLI / Models
SL20 / SL30
ST20 / ST25 / ST30

MACCHINE COMPATIBILI / Compatibility machines
Okuma LB15/25/300

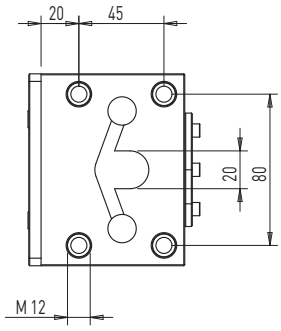

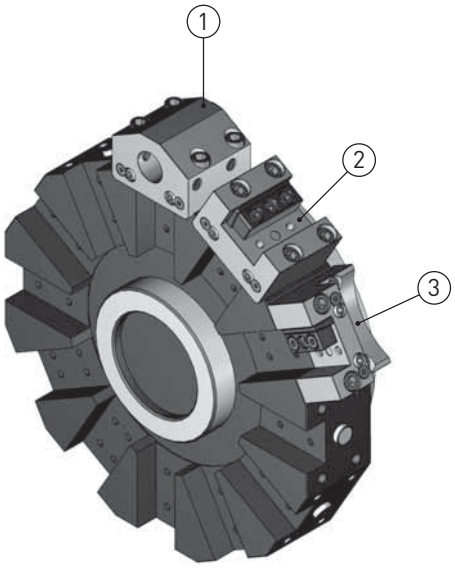

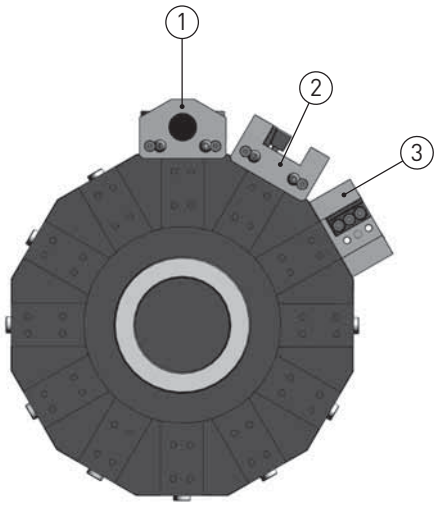

1

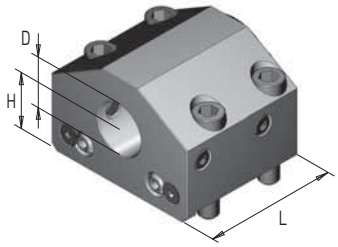

Art. / Code	Art. / Code HAAS	D	H	L	Coolant IN	Coolant OUT
7H6C32	BOT20MID	32	31.75	101.5	✓	✓
7H6C32 R	BOT20MID	32	31.75	101.5	✓	✓
7H6C40	BOT20MID	40	31.75	101.5	✓	✓
7H6C40 R	BOT20MID	40	31.75	101.5	✓	✓

2

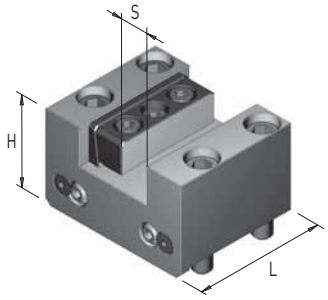

Art. / Code	Art. / Code HAAS	S	H	L	Coolant IN	Coolant OUT
8H6C50	BOT20MFG	25x25	56	101.5	✗	✓

3

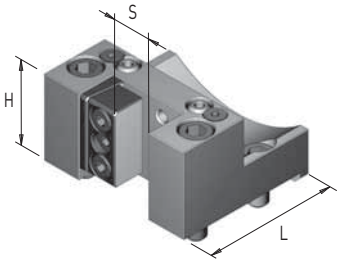

Art. / Code	Art. / Code HAAS	S	H	L	Coolant IN	Coolant OUT
8H6V50	BOT20MOD	25x25	55	91.5	✗	✓

MODELLI / Models
SL10
ST10 / ST15

MACCHINE COMPATIBILI / Compatibility machines
Okuma LLC 152 S

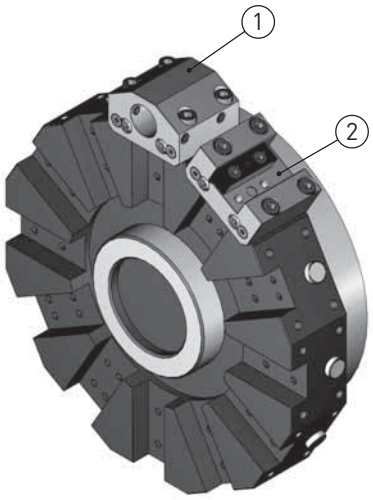

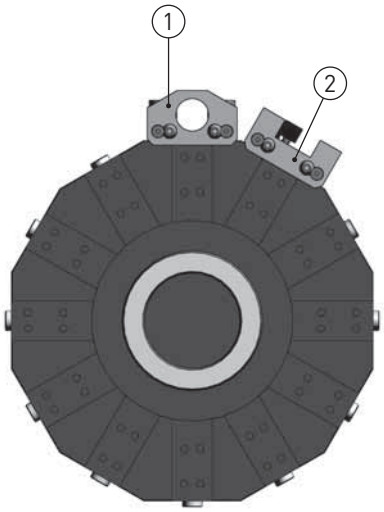

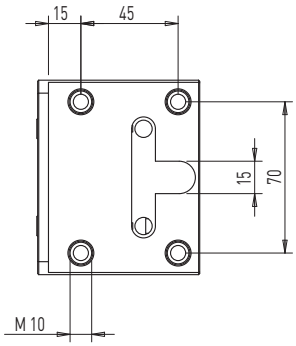

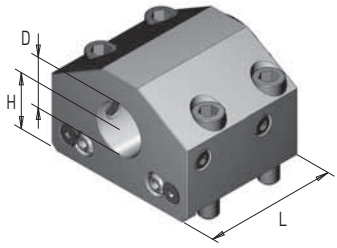

1

Art. / Code	Art. / Code HAAS	D	H	L	Coolant IN	Coolant OUT
7H3C32	BOT10MID-32	32	25.40	75	✓	✓
7H3C32 R	BOT10MID-32	32	25.40	75	✓	✓

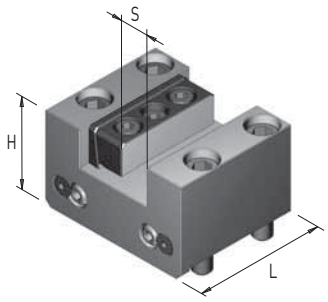

2

Art. / Code	Art. / Code HAAS	S	H	L	Coolant IN	Coolant OUT
8H3C40	BOT10MFG	20x20	40	75	✗	✓

MODELLI / Models
LB2000 EX / LB2500 EX / LB3000 EX (M-MW-MY-MYW)
LU2000 EX / LU2500 EX / LU3000 EX (M-MW-MY)
GENOS L300 (MY-MW-MYW)

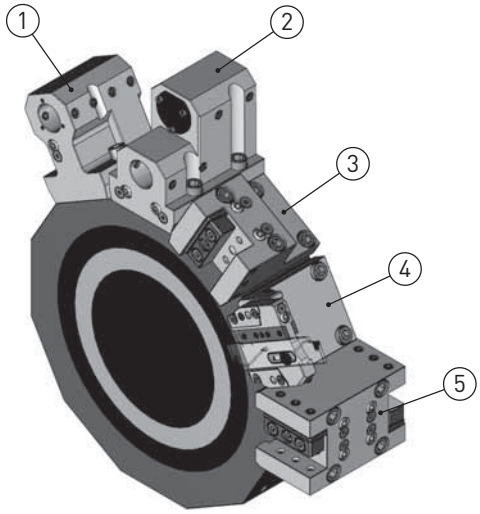

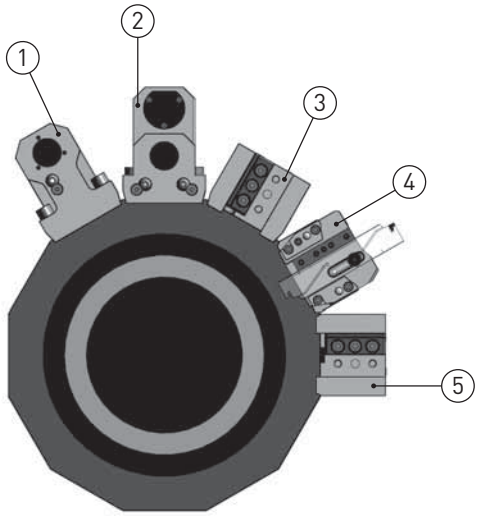

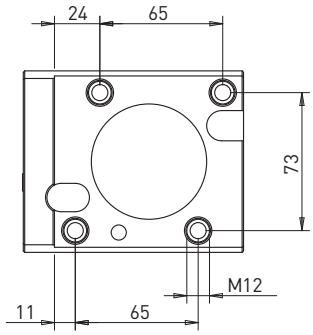

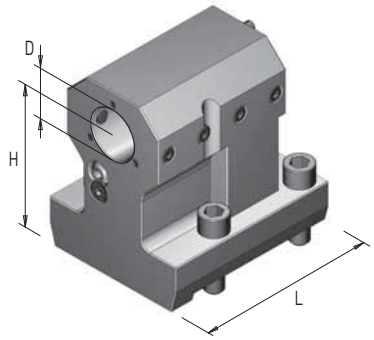

1

Art. / Code	Art. / Code OKUMA	D	H	L	Coolant IN	Coolant OUT
7K6C32 H90	/	32	90	116	✓	✓
7K6C32 R H90	/	32	90	116	✓	✓
7K6C40 H90	/	40	90	116	✓	✓
7K6C40 R H90	/	40	90	116	✓	✓
7K6C40 H110	/	40	110	116	✓	✓
7K6C40 R H110	/	40	110	116	✓	✓

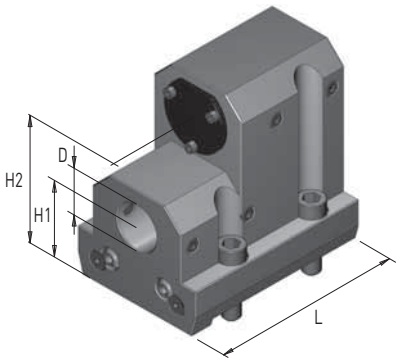

2

Art. / Code	Art. / Code OKUMA	D	H1	H2	L	Coolant IN	Coolant OUT
7K6D32	/	32	50	105	133	✓	✓
7K6D32 R	/	32	50	105	133	✓	✓
7K6D40	/	40	50	105	133	✓	✓
7K6D40 R	/	40	50	105	133	✓	✓

MODELLI / Models
LB2000 EX / LB2500 EX / LB3000 EX (M-MW-MY-MYW)
LU2000 EX / LU2500 EX / LU3000 EX (M-MW-MY)
GENOS L300 (MY-MW-MYW)

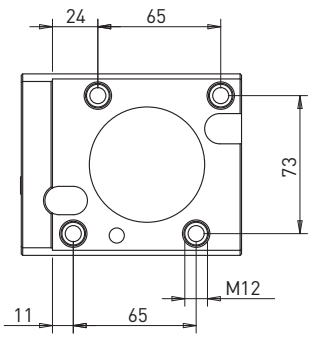

3

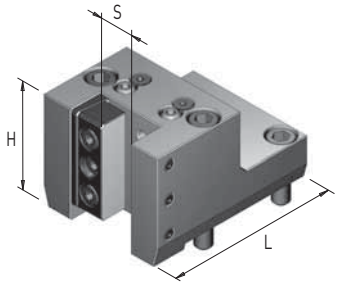

Art. / Code	Art. / Code OKUMA	S	H	L	Coolant IN	Coolant OUT
8K6V50	/	25X25	75	126	✗	✓

4

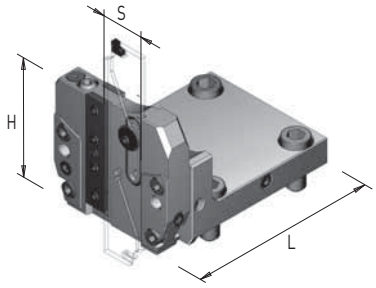

Art. / Code	Art. / Code OKUMA	S	H	L	Coolant IN	Coolant OUT
8K6B32	/	ISCAR32	85	126	✓	✓

5

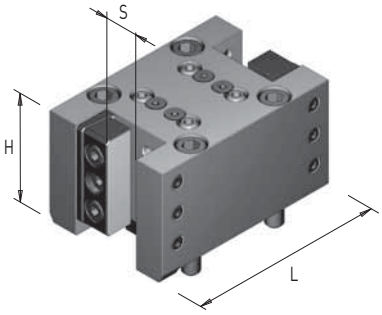

Art. / Code	Art. / Code OKUMA	S	H	L	Coolant IN	Coolant OUT
8K6D50	/	25X25	75	152	✗	✓

MODELLI / Models
MT 12
MT 200

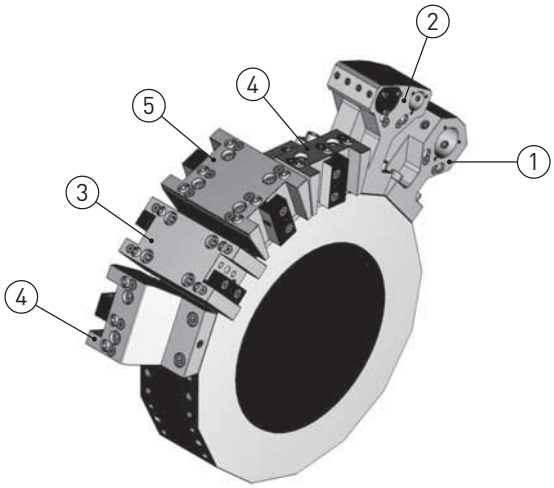

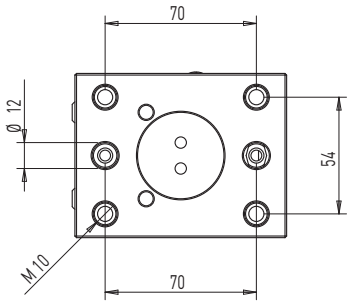

1

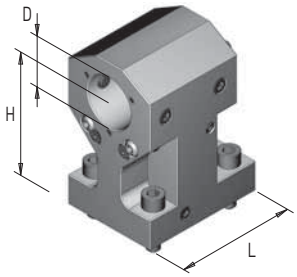

Art. / Code	Art. / Code MURATEC	D	H	L	Coolant IN	Coolant OUT
7MU5C40 H100	/	40	100	98	✓	✓

2

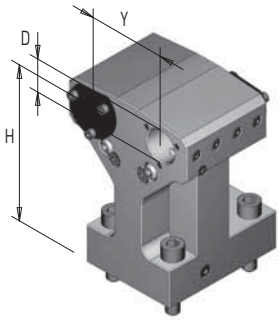

Art. / Code	Art. / Code MURATEC	D	H	Y	Coolant IN	Coolant OUT
7MU5D25 Y60	/	25	125	60	✓	✓

3

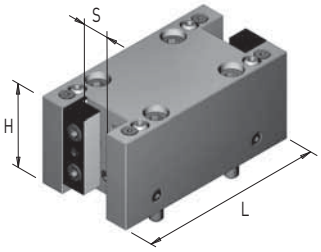

Art. / Code	Art. / Code MURATEC	S	H	L	Coolant IN	Coolant OUT
8MU5D40	/	20x20	69	150	✗	✓

4

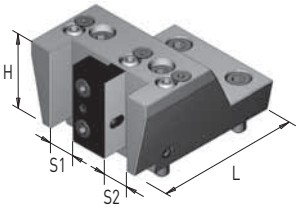

Art. / Code	Art. / Code MURATEC	S1	S2	H	L	Coolant IN	Coolant OUT
8MU5V20 D	/	20x20	20x20	69	124	✗	✓

5

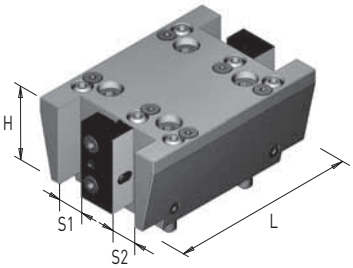

Art. / Code	Art. / Code MURATEC	S1	S2	H	L	Coolant IN	Coolant OUT
8MU5D20 Q	/	20x20	20x20	69	150	✗	✓

MODELLI / Models
CSD-200 II
CSD-300 II (R)

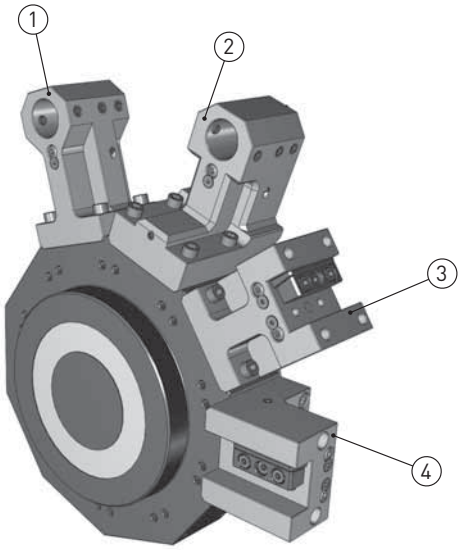

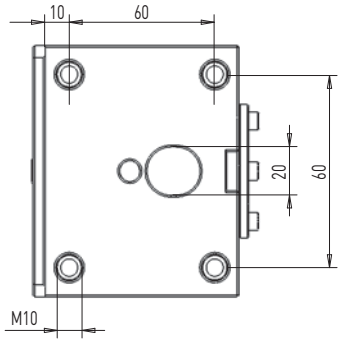

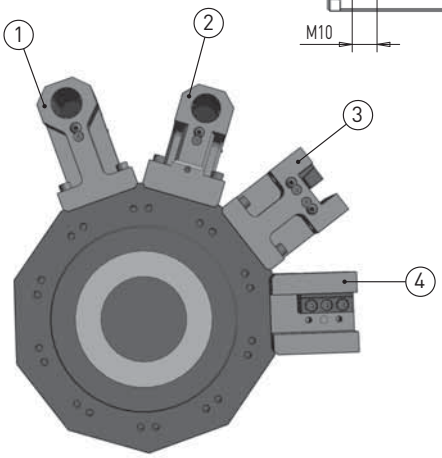

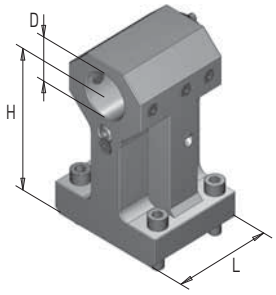

1

Art. / Code	Art. / Code FUJI	D	H	L	Coolant IN	Coolant OUT
7F6C40 H130	HNW40BC-C3N	40	130	85	✓	✓

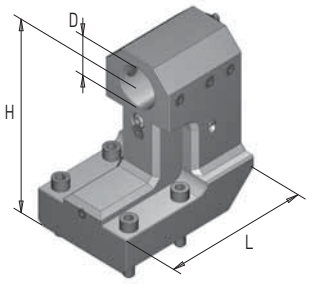

2

Art. / Code	Art. / Code FUJI	D	H	L	Coolant IN	Coolant OUT
7F6A40 H130	/	40	130	150	✓	✓

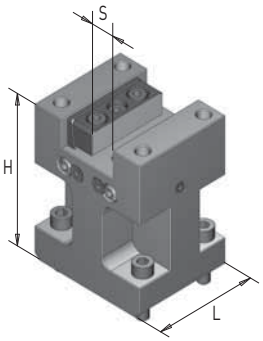

3

Art. / Code	Art. / Code FUJI	S	H	L	Coolant IN	Coolant OUT
8F6C50	/	25x25	130	85	✗	✓

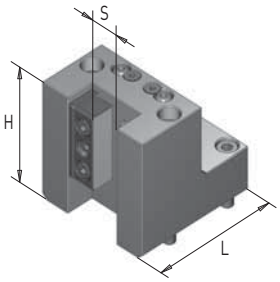

4

Art. / Code	Art. / Code FUJI	S	H	L	Coolant IN	Coolant OUT
8F6V50	HNW255AH	25x25	105	110	✗	✓

MODELLI / Models
GLS 150 series
GLS 200 series

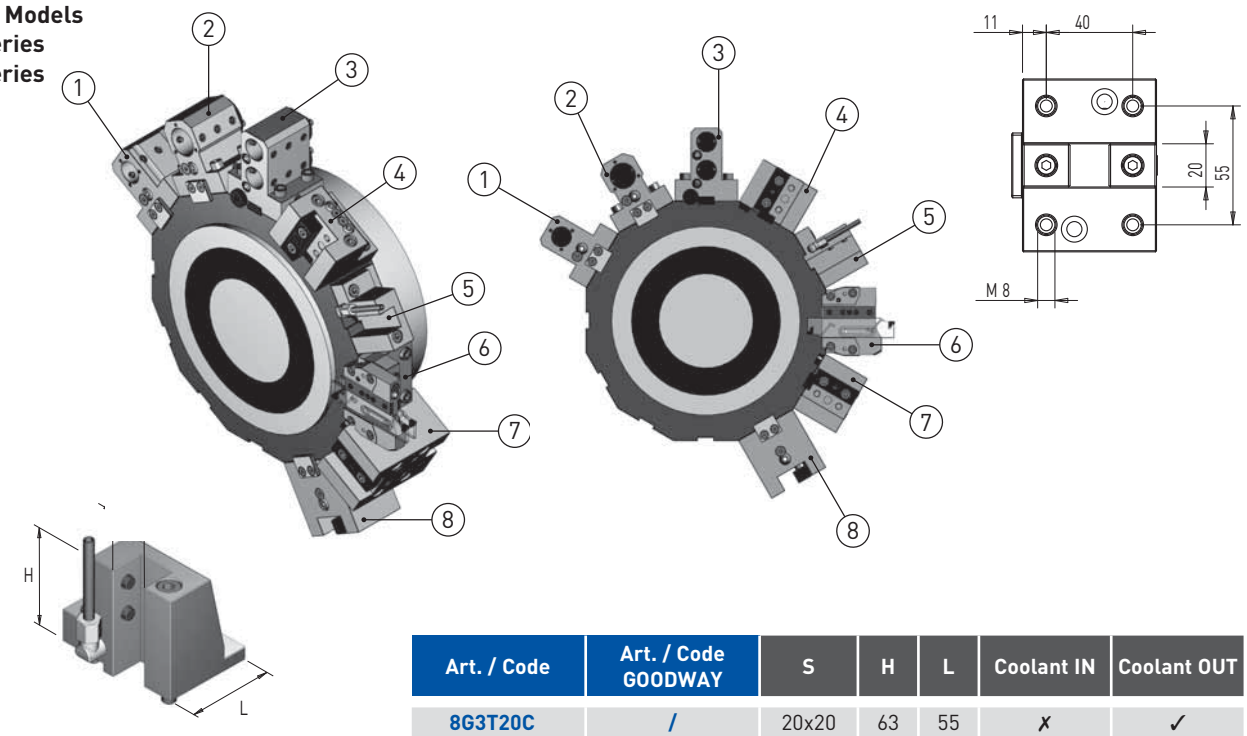

5

Art. / Code	Art. / Code GOODWAY	S	H	L	Coolant IN	Coolant OUT
8G3T20C	/	20x20	63	55	✗	✓

per i portautensili 1 / 2 / 3 / 4 / 6 / 7 / 8 vedi portautensili per NAKAMURA tipo 7N3... 8N3... a pag. 69
for toolholder 1 / 2 / 3 / 4 / 6 / 7 / 8 see pag. 69 NAKAMURA type 7N3... 8N3...

MODELLI / Models
GA 200 / 260 / 280
GS 200 / 230 / 260 / 280
GA 2000 / 2600 / 2800 / 3000 / 3300 / 3600

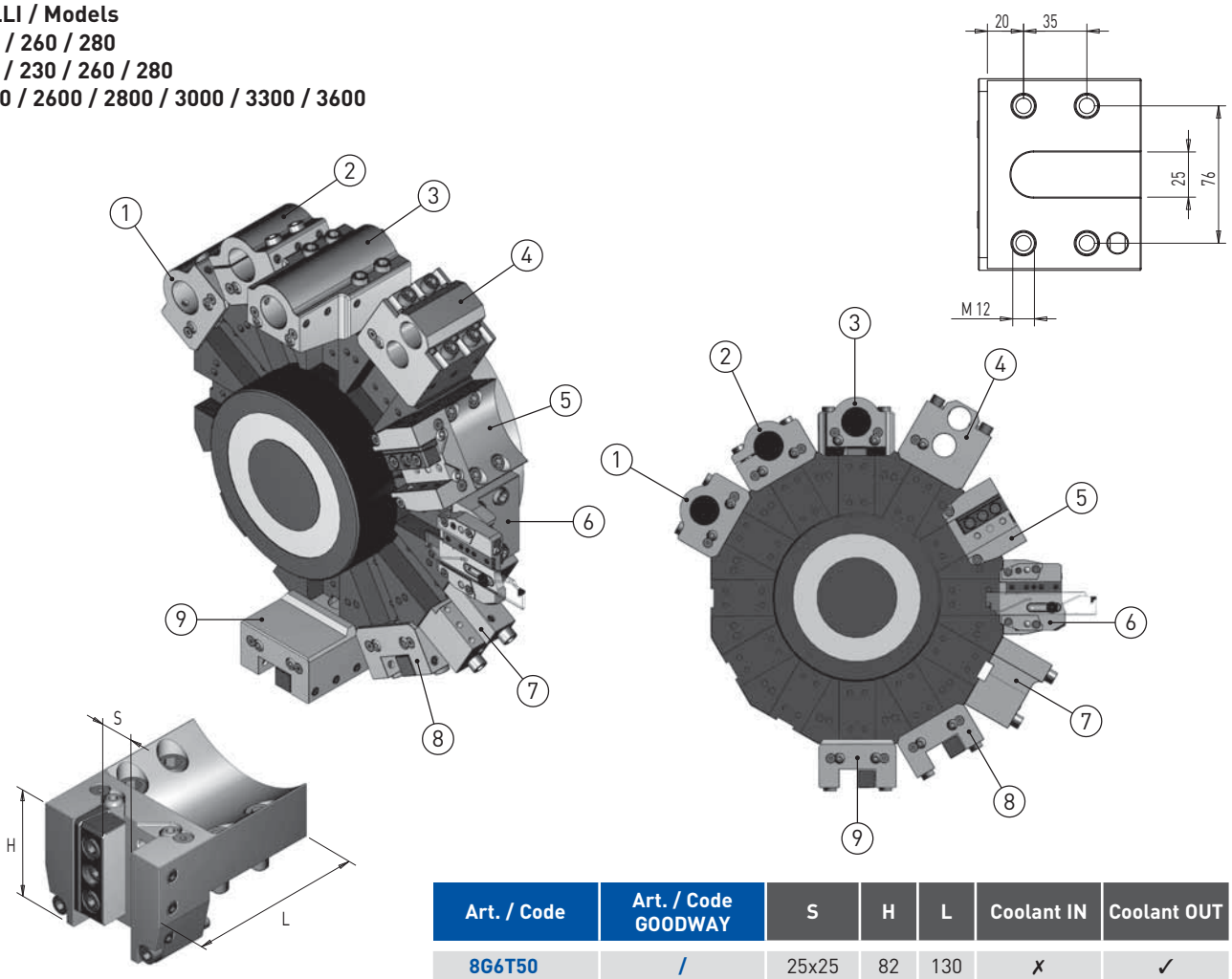

5

Art. / Code	Art. / Code GOODWAY	S	H	L	Coolant IN	Coolant OUT
8G6T50	/	25x25	82	130	✗	✓

per i portautensili 1 / 2 / 3 / 4 / 6 / 7 / 8 /9 vedi portautensili per DMG-MORI SEIKI tipo 7M6... 8M6... a pag. 51
for toolholder 1 / 2 / 3 / 4 / 6 / 7 / 8 / 9 see pag. 51 DMG-MORI SEIKI type 7M6... 8M6...

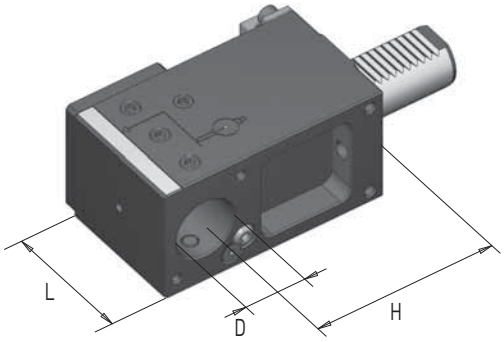

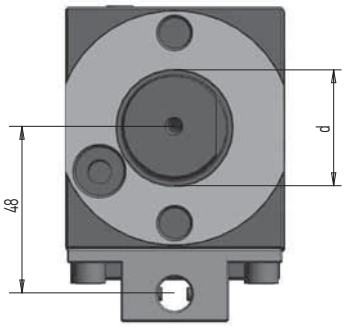

SAUTER

Art. / Code		d	D	H	L
9E63032 H85	VDI30	30	32	85	70
9E63032 H100	VDI30	30	32	100	70

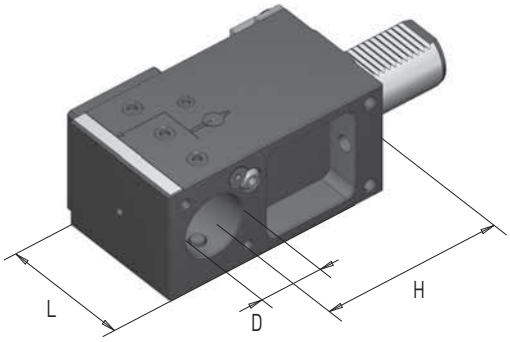

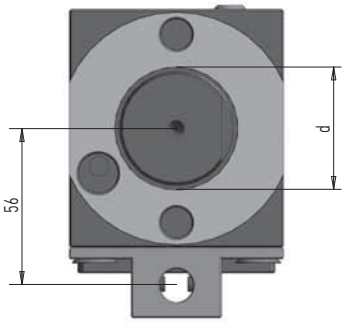

SAUTER

Art. / Code		d	D	H	L
9E64040 H120	VDI40	40	32	120	85

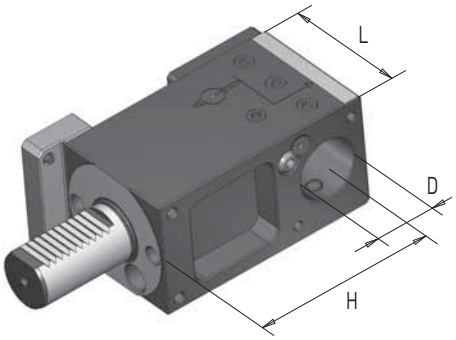

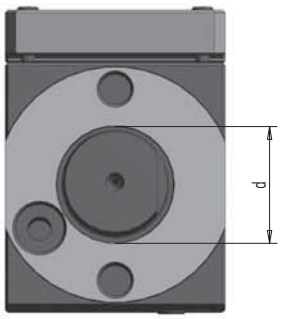

BARUFFALDI

Art. / Code		d	D	H	L
9E63032 B100	VDI30	30	32	100	70

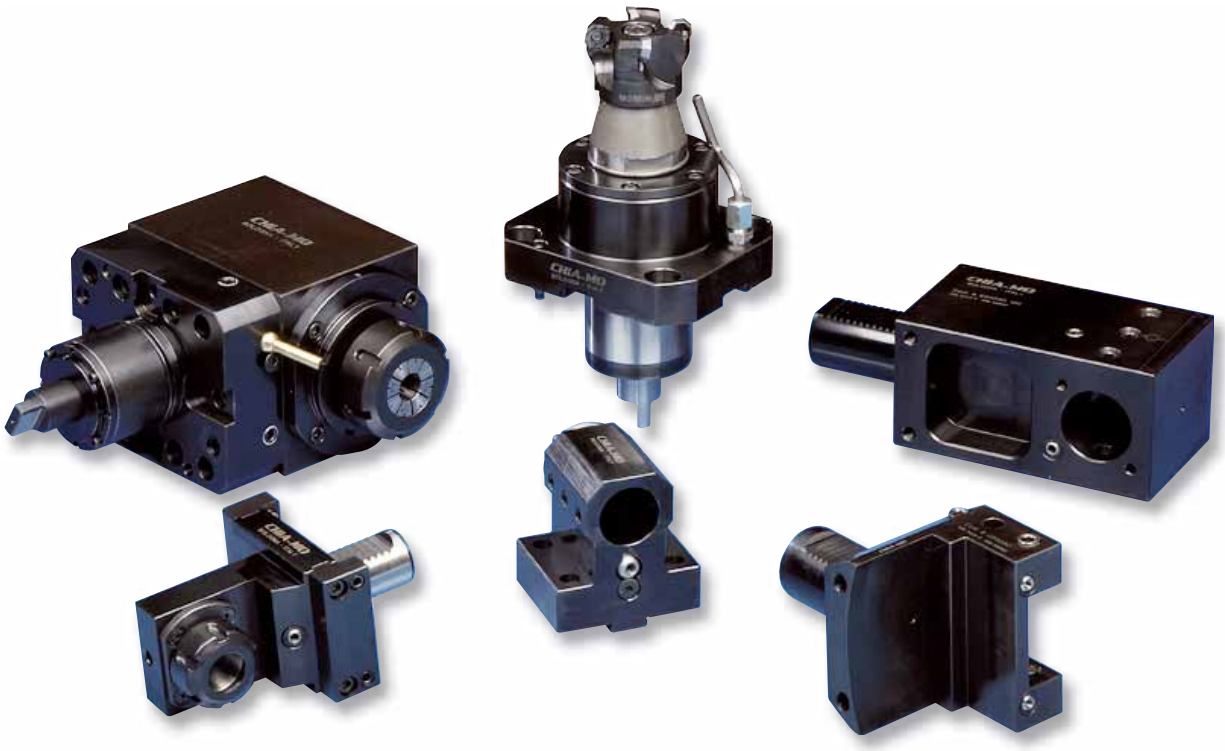

OLTRE ALLA SERIE DI PORTAUTENSILI "STANDARD" DISPONIBILI A MAGAZZINO, LA CHIA-MO È SPECIALIZZATA NELLA REALIZZAZIONE, CON PRODUZIONI SPECIALI ESEGUITE IN MODO TEMPESTIVO E AFFIDABILE, DI PORTAUTENSILI "SU RICHIESTA" PER RISOLVERE LE SPECIFICHE PROBLEMATICHE DEL CLIENTE.

TOGETHER WITH THE SERIES OF "STANDARD" TOOL HOLDERS AVAILABLE FROM STOCK, CHIA-MO IS ALSO SPECIALIZED IN THE PRODUCTION, WITH SPECIAL PRODUCTS MADE PROMPTLY AND RELIABLY, OF "CUSTOMISED" TOOL HOLDERS TO RESOLVE SPECIFIC PROBLEMS OF THE CUSTOMER.

TASSELLO PER FISSAGGIO UTENSILI IN TORRETTE ED IN PORTAUTENSILI
Locking blocks for tool fastening in turrets and toolholders

Art. / Code	S	L	I	Per portautensili / For toolholders
999.005	25	109	50	8M6.T50 - 8M6.T50 L
999.013	25	70	40	8B6.V50 - 8D7.D50 - 8D7.V50 - 8D7.V50 L130 8H6.C50 - 8K6.D50 - 8K6.V50 - 8M5.V50 8M8.C50 - 8M8.D50 - 8M8.V50
999.013 H	25	48	29	8H6.C50
999.017	20	63	36	8M5.V40 - 8M5.C40 - 8M5D40 - 8M8.V40 8M8.C40 - 8M8.D40
999.024	25	64	40	8D6.V50 - 8D6.D50
999.024 I52	25	72	52	DOOSAN SEDE 25
999.026	20	60	32	8B6.V40 - 8B6.D40 - 8B6.C40 - 8B6.V40 L 8D5.C40 - 8D5.D40 - 8D5.V40 - 8H3.C40 8MU5.D40 - 8N3.V40 - 8N3.D40 - 8N3.C40 8N4.V40 - 8N4.D40 - 8N4.C40
999.028	16	45	28	8B4.V32 - 8B4.D32 - 8B4.C32 - 8B4.V32 L
999.032	32	100	50	SEDE 32

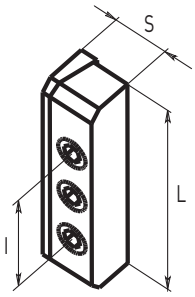

TASSELLO PER FISSAGGIO UTENSILI IN PORTAUTENSILI
Locking blocks for tool fastening in toolholders

Art. / Code	S	L	Per portautensili / For toolholders
999.010	18	50	8M3.D40 - 8M8.D40
999.009	18	79	8M3.C40 - 8M3.L40 - 8M3.V40 - 8M8.C40
999.008	24	60	8M6.D50 - 8M8.D50 - 8M8.V50
999.004	24	90	8M6.C50 - 8M6.L50 - 8M6.V50 - 8M6.V50 L - 8M8.V50 L

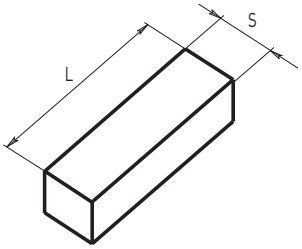

PIASTRA DI RIDUZIONE UTENSILI DA 25 A 20
Tool reduction plate from 25 to 20

Art. / Code	S	H	L
999.021	24.5	19.5	90

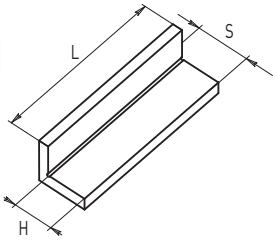

TUBINO IN RAME PER REFRIGERANTE
Copper coolant pipe

Art. / Code	D	L	F	Raccordo / Connection
999.015	6	100	1/8	DIRITTO (Straight)
999.015 B	6	100	1/8	90°

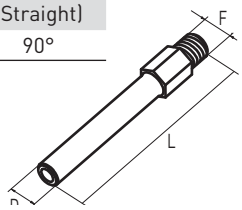

TAPPI PER REFRIGERAZIONE INTERNA
Ring for inner coolant feeding system

Art. / Code	D	Per foro / For hole	Fig.
999.012	40	25	1
999.001	48	32	1
999.002	55	40	1
999.007	70	50	1
999.035	78	60	1

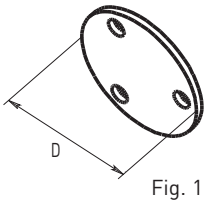

Fig. 1

PER PORTAUTENSILE / For toolholder

Art. / Code		Fig.
999.012 B	7D6.D25	2
999.023	7D6.C40	2

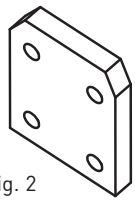

Fig. 2

BLOCCHETTO PER ADDUZIONE REFRIGERANTE
Coolant plate

PIASTRINO PER DEVIAZIONE REFRIGERANTE
Coolant deviation plate

Art. / Code	Art. / Code MORI SEIKI	S	L	H	I	Fig.
999.018 B	CB10	88	45	16.5	70	1
999.018	B52059	65	40	12	—	2

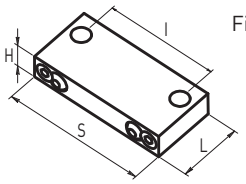

Fig. 1

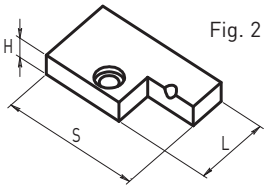

Fig. 2

SFERE PER ORIENTAMENTO REFRIGERAZIONE
Cooling direction balls
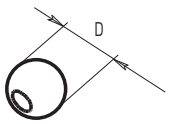
Art. / Code	D
999.003	14
999.003 C	12
999.003 D	10
999.003 E	8